Series 307

Granville-Phillips Series 307
Vacuum Measurement Controller

Instruction Manual

Instruction manual part number 307024

Revision 06 - January 2008

Series 307

Granville-Phillips Series 307 Vacuum Measurement Controller

This Instruction Manual is for use with all Granville-Phillips Series 307 Vacuum Measurement Controllers. A list of applicable catalog numbers is provided on the following page.

BROOKS AUTOMATION

Customer Service/Support

For customer service, 24 hours per day, 7 days per week, every day of the year including holidays, toll-free within the USA, phone 1–800–367–4887

For customer service within the USA, 8 AM to 5 PM, weekdays excluding holidays:

- Toll-free, phone: 1–800–776–6543
- Phone: 1–303–652–4400
- FAX: 1–303–652–2844
- Email: *co-csr@brooks.com*
- World Wide Web: www.brooks.com

Instruction Manual

© 1986-2008 Brooks Automation, Inc. All rights reserved.
Granville-Phillips and Convectron are registered trademarks of Brooks Automation, Inc. All other trademarks and registered trademarks are the properties of their respective owners.

Series 307 Vacuum Gauge Controller Part Numbers

307501: I^2R degas (Std.) / half-rack mount, remote power supply

307502: I^2R degas (Std.) / left mount, side-by-side with power supply for 19-inch rack

307507: EB degas (UHV) / half-rack mount, remote power supply

307508: EB degas (UHV) / left mount, side-by-side with power supply for 19-inch rack

307601: I^2R degas (Std.) / clean room, half-rack mount, remote power supply

307602: I^2R degas (Std.) / clean room, left mount, side-by-side with power supply for 19-inch rack

307701: I^2R degas (Std.) / half-rack mount, remote power supply

307702: I^2R degas (Std.) / side-by-side with power supply for 19-inch rack

307703: EB degas (Std.) / Red display (Ion Gauge Only), side-by-side with power supply for 19-inch rack

307704: I^2R degas (Std.) / Red display (Ion Gauge Only), side-by-side with power supply for 19-inch rack

307 X X X - X X X - X X

Interface Options (Slot X):	
None	0
RS-232	A
RS-485	B
IEEE 488	C
Linear Analog Output	D
Gauge Options (Slot Y):	
None	0
Dual Convectron	1
Convectrom / Capaitance Manometer	2
Dual Thermocouple	3
Setpoint Options (Slot Z):	
None	0
2 setpoint relays for ion gauge	A
6 setpoint relays, 2 per channel	B
6 setpoint relays, user configurable	C
Display Options - Measurement Units:	
Torr	T
mbar	M
Pa	P
Power Cord Options:	
North America 115 V	1
North America 240 V	2
Universal Europe 220 V	3
United Kingdom 240 V	4

Table of Contents

Safety Instructions **9**
Certification 12
Extended Warranty 12
Service Guidelines 12
FCC Verification 12
Service Form 13

Chapter 1 The Series 307 Vacuum Gauge Controller **15**
1.1 General Description 15
1.2 Available Configurations 15
1.2.1 Power Supply Module 15
1.2.2 Ion Gauge (IG) Electrometer Module 15
1.2.3 Remote Input/Output Module 15
1.2.4 Convectron Gauge (CG) Module 15
1.2.5 Thermocouple Gauge (TC) Module 16
1.2.6 Process Control Module 16
1.2.7 RS-232 Computer Interface Module 16
1.2.8 RS-485 Computer Interface Module 16
1.2.9 IEEE-488 Computer Interface Module 16
1.2.10 Capacitance Manometer Module 16
1.3 Installation 17
1.3.1 Line Voltage Selection 17
1.3.2 Module Installation 17
1.3.2.1 Remote Input/Output Module 19
1.3.2.2 Single Digit Display 19
1.3.3 Mounting Configurations 20
1.3.4 Ionization Gauge Types and Installation 22
1.3.5 Cable Connections 23
1.3.6 System Ground Test Procedure 24
1.3.6.1 Procedure 24
1.3.7 Grounding the System 25
1.4 Operation 27
1.4.1 Summary of Controls and Indicators 27
1.4.2 Units of Measure 27
1.4.3 Ion Gauge On/Off 27
1.4.4 Degas On/Off 28
1.4.5 Remote Input/Output Option 28
1.5 Theory of Operation 29
1.5.1 Ion Gauge Theory 29
1.5.2 Microcontrollers and Bus Structure 30
1.6 Calibration 30
1.7 Troubleshooting, Basic 307 Vacuum Gauge Controller 31
1.7.1 Guidelines 31
1.7.2 Fault Indications 32
1.7.3 Repair Ordering 33
1.8 Specifications 34
1.9 307 Extended Capability Vacuum Gauge Controller 35
1.9.1 Gauges 35
1.9.2 Process Control (C, D and E) 35
1.9.3 Computer Interface 35

Chapter 2 The Ion Gauge Electrometer Module 37
2.1 Introduction 37
2.2 Installation 37
2.2.1 Units of Measure 37
2.3 Operation 38
2.3.1 Ion Gauge On/Off and Degas On/Off 38
2.3.2 Relative Gas Sensitivities 39
2.4 Electrometer Calibration 42
2.5 Electrometer Troubleshooting 43
2.6 Electrometer Module Specifications 44

Chapter 3 The Convectron Gauge Module 45
3.1 Safety Instructions 45
3.1.1 Explosive Gases 45
3.1.2 Limitation on Use of Compression Mounts 45
3.1.3 Tube Mounting Position 45
3.1.4 Overpressure 45
3.1.5 High Indicated Pressure 46
3.1.6 Chemical 46
3.1.7 Sensor Failure 46
3.1.8 Tube Contamination 46
3.2 Convectron Module, Introduction 47
3.3 Convectron Installation 47
3.3.1 Units of Measure 47
3.3.2 Convectron Gauge Tube Installation 48
3.3.2.1 Important Precautions for Gauge Tube Installation 48
3.3.3 Gauge Tube Orientation 49
3.3.3.1 Compression Mount (Quick Connect) 49
3.3.3.2 1/8 NPT Mount 50
3.3.3.3 NW16KF Flange Mount 50
3.4 Convectron Operation 50
3.4.1 Reading Pressure 50
3.4.2 Special Considerations for Use Below 10^{-3} Torr 50
3.4.3 Use With Gases Other Than N_2 and Air 51
3.4.4 Indicated vs. True Pressure Curves 51
3.4.5 Analog Output 59
3.5 Convectron Calibration and Maintenance 60
3.5.1 Cleaning the Gauge Tube 61
3.6 Theory of Operation 62
3.7 Convectron Troubleshooting 63
3.7.1 Transducer Test Procedure 63
3.8 Convectron Specifications 64

Chapter 4 The Thermocouple Gauge Module 65
4.1 Introduction 65
4.2 Thermocouple Gauge Module Installation 65
4.2.1 Units of Measure 65
4.2.2 Thermocouple Gauge Tube Installation 66
4.3 Thermocouple Gauge Operation 66
4.3.1 Reading Pressure 66
4.3.2 Analog Output 66
4.3.3 Filament Auto Turn-On 67
4.4 Thermocouple Gauge Calibration 68
4.5 Thermocouple Gauge Troubleshooting 69
4.6 Thermocouple Gauge Specifications 70

Chapter 5 The Process Control Module 71
5.1 Introduction to the Process Control Module 71
5.2 Process Control Module Installation 71
5.2.1 Process Control System Connections 71
5.3 Process Control Operation 72
5.3.1 Setpoint Display and Adjustment 72
5.3.2 Points to Consider in Using the Process Control Module 73
5.3.3 Relay Polarity Setting 74
5.3.4 Ion Gauge Assignment 74
5.4 Process Control with User Assignable Gauges 76
5.5 Process Control Theory of Operation 77
5.6 Process Control Troubleshooting 77
5.7 Process Control Specifications 77

Chapter 6 The RS-232 Module 79
6.1 Introduction 79
6.2 RS-232 Installation 79
6.2.1 Selecting the Byte Format 79
6.2.1.1 Baud Rate 79
6.2.1.2 Character Framing 80
6.2.1.3 Talk-Only Mode 80
6.2.1.4 Handshake Line Control Switches 80
6.2.1.5 Invert RTS Switch 81
6.3 Operation 81
6.3.1 Command Syntax 81
6.3.2 Error Messages 83
6.4 RS-232 Theory of Operation 84
6.4.1 Handshaking 84
6.5 RS-232 Troubleshooting 85
6.6 RS-232 Specifications 86

Chapter 7 The RS-485 Module 87
7.1 RS-485 Introduction 87
7.2 RS-485 Installation 87
7.2.1 RS-485 Address 87
7.2.2 Response Delay for the RS-485 Interface 88
7.2.3 Selecting the Byte Format for RS-485 Communications 88
7.2.4 Character Framing for the RS-485 Computer Interface 88
7.2.5 Connecting the RS-485 Computer Interface 89
7.3 Preparing for use of the RS-485 Computer Interface 91
7.4 RS-485 Command Syntax 92
7.5 RS-485 Troubleshooting 94

Chapter 8 The IEEE 488 Module 95
8.1 Introduction 95
8.2 IEEE 488 Installation 95
8.2.1 Selecting the Interface Bus Address 95
8.2.2 Talk-only Mode 96
8.2.3 SRQ Mode 96
8.3 IEEE 488 Operation 96
8.3.1 Command Syntax 96
8.3.2 Error Messages 98
8.4 IEEE-488 Troubleshooting 99
8.5 IEEE 488 Specifications 99

Chapter 9 The Convectron/Capacitance Manometer Module **101**
9.1 Introduction 101
9.2 Installation 101
9.2.1 Units of Measure 101
9.2.2 Capacitance Manometer Cable Installation 102
9.3 Operation 103
9.3.1 Reading Pressure 103
9.3.2 Analog Output 103
9.4 Calibration 104
9.4.1 Initial Transducer Calibration 104
9.5 Theory of Operation 105
9.6 Capacitance Manometer Troubleshooting 105
9.7 Specifications 106

Chapter 10 Linear Analog Output Module **109**
10.1 Introduction 109
10.2 Installation 109
10.2.1 Electrometer (IG) Range Selection 109
10.2.2 Cable Connections 110
10.2.3 Pin Assignment 110
10.3 Operation 110
10.4 Calibration 111
10.4.1 IG Zero Adjust 111
10.4.2 IG Full Scale Adjust 111
10.4.3 TC Zero Adjust 111
10.4.4 TC Full Scale Adjust 111
10.5 Theory of Operation 111
10.6 Troubleshooting 112
10.7 Specifications 112
10.7.1 Thermocouple Output 112
10.7.2 Electrometer (IG) Output 113
Cable Diagrams **115**

Index **121**

START BY READING THESE IMPORTANT SAFETY INSTRUCTIONS AND NOTES collected here for your convenience and repeated with additional information at appropriate points in these instructions.

These safety alert symbols mean caution - personal safety, property damage or danger from electric shock. Read these instructions carefully.

In these instructions the word "product" refers to the Granville-Phillips Series 307 Vacuum Gauge Controller and all of its approved parts and accessories.

NOTE: These instructions do not and cannot provide for every contingency that may arise in connection with the installation, operation, or maintenance of this product. If you require further assistance, contact Granville-Phillips at the address on the title page of this manual.

This product has been designed and tested to offer reasonably safe service provided it is installed, operated, and serviced in strict accordance with these safety instructions.

These safety precautions must be observed during all phases of operation, installation, and service of this product. Failure to comply with these precautions or with specific warnings elsewhere in this manual violates safety standards of design, manufacture, and intended use of the instrument. Brooks Automation, Inc./Granville-Phillips disclaims all liability for the customer's failure to comply with these requirements.

The service and repair information in this manual is for the use of Qualified Service Personnel. To avoid shock, do not perform any procedures in this manual or perform any servicing on this product unless you are qualified to do so.

- *Read Instructions* – Read all safety and operating instructions before operating the product.
- *Retain Instructions* – Retain the Safety and Operating Instructions for future reference.
- *Heed Warnings* – Adhere to all warnings on the product and in the operating instructions.
- *Follow Instructions* – Follow all operating and maintenance instructions.
- *Accessories – Do not* use accessories not recommended in this manual as they may be hazardous.

To reduce the risk of fire or electric shock, do not expose this product to rain or moisture.

Damage Requiring Service

Disconnect the product from the wall outlet and all power sources and refer servicing to Qualified Service Personnel under the following conditions:

a. When any cable or plug is damaged.

b. If any liquid has been spilled onto, or objects have fallen into the product, or if the product has been exposed to rain or water.

c. If the product does not operate normally even if you follow the operating instructions. Adjust only those controls that are covered by the operation instructions. Improper adjustment of other controls may result in damage and will often require extensive work by a qualified technician to restore the product to its normal operation.

d. If the product has been dropped or the enclosure has been damaged.

e. When the product exhibits a distinct change in performance. This indicates a need for service.

All conductors in, on, or around the vacuum system that are exposed to potential high voltage electrical discharges must either be shielded at all times to protect personnel or must be connected to earth ground at all times.

Replacement Parts - When replacement parts are required, be certain to use the replacement parts that are specified by Granville-Phillips or that have the same characteristics as the original parts. Unauthorized substitutions may result in fire, electric shock or other hazards.

Safety Check - Upon completion of any service or repairs to this product, ask the Qualified Service Person to perform safety checks to determine that the product is in safe operating order.

Finite Lifetime - After ten years of normal use or even non-use, the electrical insulation in this product may become less effective at preventing electrical shock. Under certain environmental conditions which are beyond the manufacturer's control, some insulation material may deteriorate sooner. Therefore, periodically inspect all electrical insulation for cracks, crazing, or other signs of deterioration. Do not use if the electrical insulation has become unsafe.

Danger, High Voltage – The high voltages present within the Power Supply are capable of causing injury or death. To avoid electric shock, wait 3 minutes after power is removed before touching any component within the Power Supply. This will permit charged capacitors to discharge.

Be aware that an electrical discharge through a gas may couple dangerous high voltage directly to an ungrounded conductor almost as effectively as would a copper wire connection. A person may be seriously injured or even killed by merely touching an exposed ungrounded conductor at high potential.

This hazard is not unique to this product.

Install suitable devices that will limit the pressure to the level that the vacuum system can safely withstand. In addition, install suitable pressure relief valves or rupture disks that will release pressure at a level considerably below the pressure that the system can safely withstand.

Suppliers of pressure relief valves and pressure relief disks are listed in the Thomas Register under "Valves, Relief", and "Discs, Rupture".

Confirm that these safety devices are properly installed before installing the product. In addition, check that (1) the proper gas cylinders are installed, (2) gas cylinder valve positions are correct on manual systems, and (3) the automation is correct on automated gas delivery systems.

Proper Grounding:

All components of a vacuum system used with this or any similar high voltage product must be maintained at earth ground for safe operation. The power cord of this product shall be connected only to a properly grounded outlet. Be aware, however, that grounding this product does not guarantee that other components of the vacuum system are maintained at earth ground.

Complying with the usual warning to connect the power cable only to a properly grounded outlet is necessary but not sufficient for safe operation of a vacuum system with this or any similar high voltage producing product.

Verify that the vacuum port to which the gauges are mounted is electrically grounded. It is essential for personnel safety as well as proper operation that the envelope of the gauge be connected to a facility ground. Use a ground lug on a flange bolt if necessary.

Vacuum gauges with compression fittings may be forcefully ejected if the vacuum system is pressurized.

Using the N_2 calibration to pressurize a vacuum system above about 1 Torr with certain other gases can cause dangerously high pressures which may cause explosion of the system. See Section 3.4 on page 3-50 before using with other gases.

Warning - If used improperly, Convectron Gauges can supply misleading pressure indications that can result in dangerous overpressure conditions within the system. For use with gases other than air or N_2, consult the gas type correction charts in Section 3.4 on page 3-50.

Do not operate in an explosive atmosphere.

Do not operate the product in the presence of flammable gases or fumes.

Operation of any electrical instrument in such an environment constitutes a definite safety hazard.

Do not use the product to measure the pressure of explosive or combustible gases or gas mixtures. The sensor wire of the Convectron Gauge normally operates at only 125 °C, but it is possible that Controller malfunction can raise the sensor temperature above the ignition temperature of combustible mixtures.

Danger of explosion or inadvertent venting to atmosphere exists on all vacuum systems which incorporate gas sources or involve processes capable of pressurizing the system above safe limits.

It is the installer's responsibility to ensure that the automatic signals provided by the product are always used in a safe manner. Carefully check manual operation of the system and the set point programming before switching to automatic operation.

Where an equipment malfunction could cause a hazardous situation, always provide for fail-safe operation. As an example, in an automatic backfill operation where a malfunction might cause high internal pressures, provide an appropriate pressure relief device.

The fumes from solvents such as trichloroethylene, perchloroethylene, toluene, and acetone can be dangerous to health if inhaled. Use only in well ventilated areas exhausted to the outdoors. Acetone and toluene are highly flammable and should not be used near an open flame or energized electrical equipment.

Certification

Brooks Automation, Inc./Granville-Phillips certifies that this product met its published specifications at the time of shipment from the factory. Brooks Automation, Inc./Granville-Phillips further certifies that its calibration measurements are traceable to the National Institute of Standards and Technology to the extent allowed by the Institute's calibration facility.

Extended Warranty

Brooks Automation, Inc./Granville-Phillips provides an extended warranty period to five (5) years from the date of shipment for the Granville-Phillips Series 307 Controllers. The Brooks Automation, Inc. General Terms and Conditions of Sale provide the complete and exclusive warranty for Brooks Automation, Inc./ Granville-Phillips products. This document is located on our web site at www.brooks.com, or may be obtained by contacting a Brooks Automation, Inc./Granville-Phillips Customer Service Representative.

Service Guidelines

Some minor problems are readily corrected on site. If the product requires service, please contact our Customer Service Department at 1-303-652-4400 for troubleshooting help over the phone. If the product must be returned for service, request a Return Authorization (RA) from Brooks Automation, Inc./Granville-Phillips. Do not return products without first obtaining an RA. See the Service Form on the following page.

Shipping damage on returned products as a result of inadequate packaging is the Buyer's responsibility.

When returning equipment to Brooks Automation, Inc./Granville-Phillips, please use the original packing material whenever possible. Otherwise, contact your shipper or Brooks Automation, Inc./Granville-Phillips for safe packaging guidelines. Circuit boards and modules separated from the controller chassis must be handled using proper anti-static protection methods and must be packaged in anti-static packaging. Brooks Automation, Inc./Granville-Phillips will supply return packaging materials at no charge upon request.

FCC Verification

NOTE: This equipment has been tested and found to comply with the limits for a Class A digital device, pursuant to Part 15 of the FCC Rules. These limits are designed to provide reasonable protection against harmful interference when the equipment is operated in a commercial environment. This equipment generates, uses, and can radiate radio frequency energy and, if not installed and used in accordance with this instruction manual, may cause harmful interference to radio communications. However, there is no guarantee that interference will not occur in a particular installation. Operation of this equipment in a residential area is likely to cause harmful interference in which case the user will be required to correct the interference at his own expense. If this equipment does cause harmful interference to radio or television reception, which can be determined by turning the equipment off and on, the user is encouraged to try to correct the interference by one or more of the following measures:

- Reorient or relocate the receiving antenna.
- Increase the separation between the equipment and the receiver.
- Connect the equipment into an outlet on a circuit different from that to which the receiver is connected.
- Consult the dealer or an experienced radio or television technician for help.

Service Form

Please photocopy this form, fill it out, and return it with your equipment:

RA No._____ Contact Granville-Phillips Customer Service at **1-303-652-4400**, or **1-800-776-6543 in the USA**; FAX: **1-303-652-2844**, or email: **co-csr@brooks.com**

Model No._____ Serial No._____ Date_____

Name _____ Phone No._____

Company_____

Address_____

_____

City_____ State_____ Zip_____

Please help Granville-Phillips continue to provide the best possible service by furnishing information that will help us determine the cause of the problem, as well as protect our analysis and calibration equipment from contamination.

Problem description:_____

_____

_____

_____

_____

Application description:_____

_____

_____

_____

Has this product been used with high vapor pressure or hazardous materials? ❑ Yes ❑ No

If Yes, please list the types of gas, chemicals (common names, specific chemical,) biological materials, or other potentially contaminating or harmful materials exposed to the product during its use.

_____

_____

_____

NOTE: PRODUCTS EXPOSED TO RADIOACTIVE MATERIAL CANNOT BE ACCEPTED BY GRANVILLE-PHILLIPS UNDER ANY CIRCUMSTANCES.

Corporate Officer Signature: _____

Printed Name_____ Phone No._____

1.1 General Description

The 307 Vacuum Gauge Controller (VGC) measures pressures from 5 x 10^{-12} Torr (6.6 x 10^{-12} mbar or 6.6 x 10^{-10} Pa) to atmosphere, depending on the modules and transducers used.

The 307 VGC can operate two ion gauges (IG) sequentially, along with two Convectron gauges (CG), two thermocouple gauges (TC) simultaneously, or one capacitance manometer and one Convectron gauge.

Pressure readout is via three front panel displays, analog output, and available computer interface.

The 307 VGC is a modular instrument which can be easily customized to fit most user's exact needs. Infrequently used controls are housed behind a hinged front panel, reducing front panel clutter and allowing the control unit to reside in a half-rack space.

The power supply is housed in a separate enclosure and may be rack-mounted alongside the control unit, or mounted separately. Reliability is increased by removing power dissipation from the control unit enclosure, which needs no ventilation. Remote mounting of the power supply minimizes heat generated in the user's instrument rack and thus increases reliability of components.

1.2 Available Configurations

1.2.1 Power Supply Module

Choice of one or two ion gauges, available with electron bombardment degas or resistance heating degas. Line voltage ranges are 90-130 volts ac or 180-260 volts ac.

1.2.2 Ion Gauge (IG) Electrometer Module

Standard IG Electrometer Module: IG pressure readout from 1 x10^{-10} Torr (readable to 10^{-11} Torr) to 1 x 10^{-1} Torr, depending on IG type and emission current used. The module reads either of two gauges sequentially. Adjustments for gauge sensitivity and emission current affect both tubes. Analog recorder output is also provided.

Ultra-high Vacuum IG Electrometer Module: Extends lower pressure limit to 5 x 10^{-12} Torr, and allows separate sensitivity and emission level adjustments for each ion gauge. Degas power is adjustable when used with the electron bombardment degas power supply.

1.2.3 Remote Input/Output Module

Provides IG status outputs, remote filament on/off, degas on/off, front panel lockout capability, and fault or degas status indication relay.

1.2.4 Convectron Gauge (CG) Module

Permits pressure measurements from 1 x 10^{-4} to 990 Torr (N_2 equivalent) from two Granville-Phillips Series 275 Convectron Gauges simultaneously. Two channel (A/B) modules allow for automatic turn-on and shut-off of ion gauges based on Convectron pressure. Also provides analog output of each indicated pressure.

1.2.5 Thermocouple Gauge (TC) Module

Provides the same functions as the Convectron module, but pressure measurement range is 1×10^{-3} Torr to 1 Torr.

1.2.6 Process Control Module

Provides 2 or 6 single pole, double throw relays: Two channels are associated with each display line. Digital setpoints have switch-setable polarity for relay activation above or below the setpoint, or if purchased, user selectable gauge setting. Manual override switches are built-in.

1.2.7 RS-232 Computer Interface Module

Provides readout of pressure and process control relay status, and ion gauge control.

1.2.8 RS-485 Computer Interface Module

Provides readout of pressure and process control relay status, and ion gauge control.

1.2.9 IEEE-488 Computer Interface Module

Provides readout of pressure and process control relay status, and ion gauge control.

1.2.10 Capacitance Manometer Module

Provides gas-type independent pressure measurement from 1×10^{-4} to 999 Torr depending on the manometer head being used. Allows local range, zero and full scale adjustments and provides power to the transducer. Readout for one Convectron gauge with features as described in the Convectron gauge section of this instruction manual is included along with analog outputs for both gauges.

1.3 Installation

1.3.1 Line Voltage Selection

Line voltages of 90-130 or 180-260 Vac are user selectable via jumpers internal to the power supply. Compare your unit to Figure 1-1 to determine if it is configured for your requirements. Do not apply power until the correct configuration is achieved.

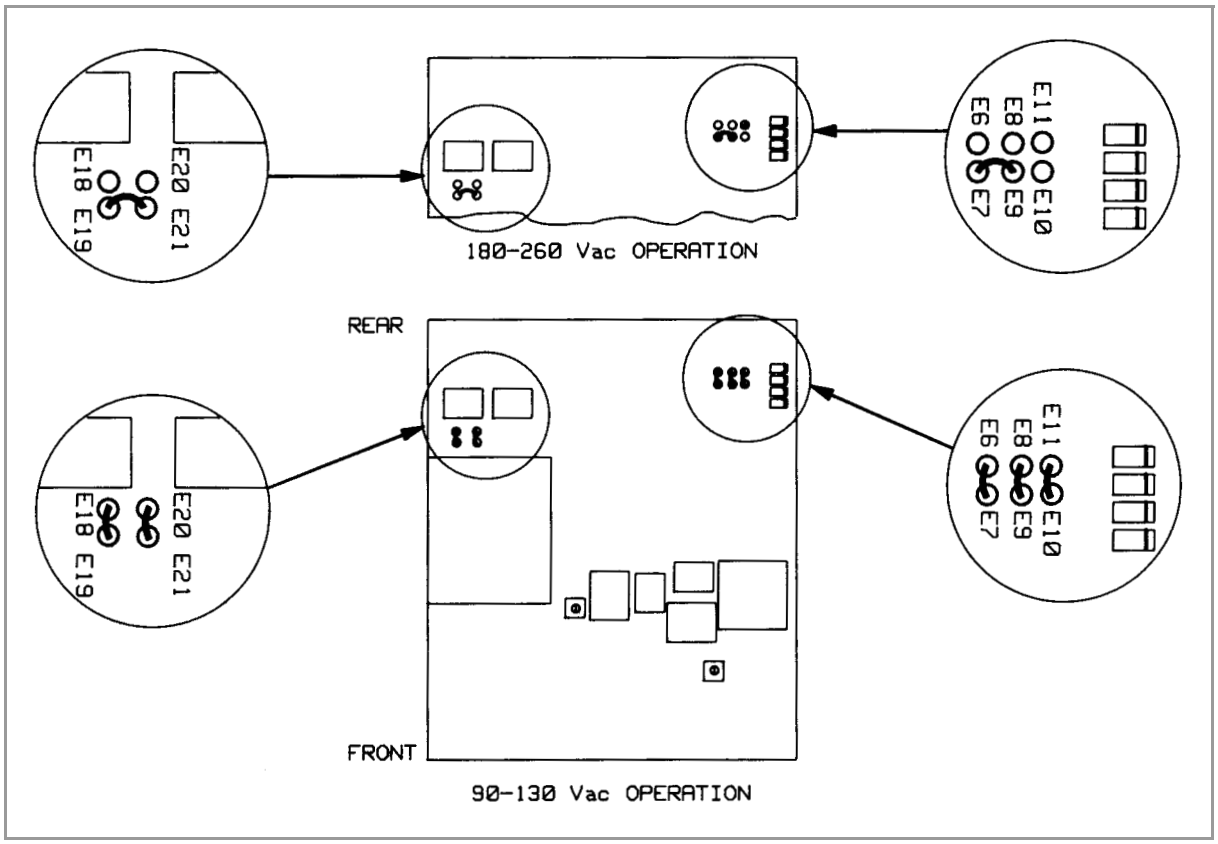

Figure 1-1 *Line Voltage Select Jumpers, Power Supply PC Board.*

1.3.2 Module Installation

Only a Phillips screwdriver is necessary for module installation.

Since the 307 modules contain static sensitive devices, follow the anti-static procedures outlined in Section 1.7 on page 31 when handling printed circuit boards.

The modules for the 307 VGC have metal brackets which interlock to form the front and rear sections of the chassis. Modules must be installed in their proper positions within the chassis (see Figure 1-2 on page 18).

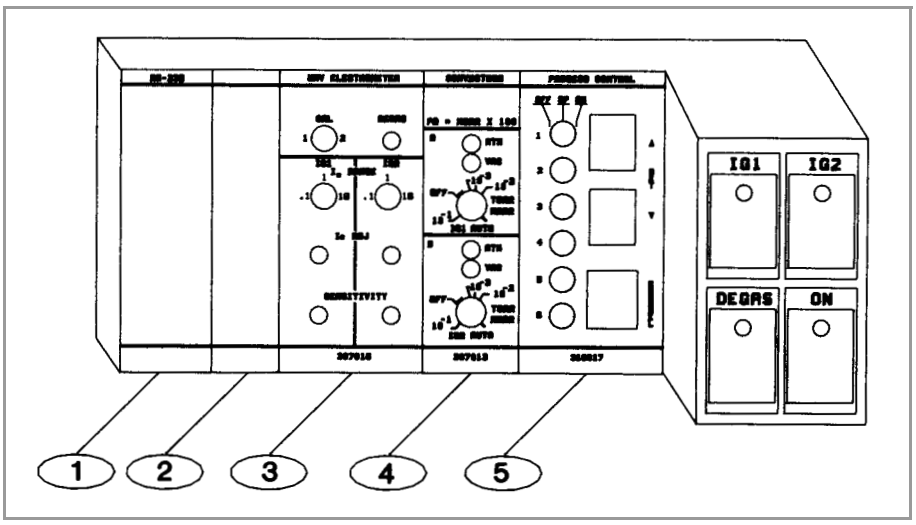

Figure 1-2 *Module Positions.*

1 — **Position for Computer Interface Module**

2 — **Blank Module**

3 — **Position for IG Electrometer Module**

4 — **Position for *Convectron*, Thermocouple or Capacitance Manometer Gauge Module**

5 — **Position for Process Control Module**

To install a module:

1. Turn off the power and remove all cabling from rear panel.
2. Remove the top cover of the control unit by removing the upper front screw and the rear screw on each side. It is not necessary to remove the lower front screws.
3. Remove the connectors holding the bus ribbon cable from all boards to the right (when viewed from the front) of the position in which the new module is to be installed, or remove the display panel and all connectors to the left.
4. Remove the blank filler module in the position in which the board is to be installed.
5. Install the new module in its proper position. Position all modules so that the chassis segments interlock properly.
6. Re-connect the bus ribbon cable connectors.
7. Install the top cover, making sure the door hinge pin is correctly located.

1.3.2.1 Remote Input/Output Module

The Remote Input/Output Module (Figure 1-3) is a small printed circuit board assembly, 7, which attaches within the right-rear section of the control unit. Mechanical attachment to the rear panel is via the two jackposts 6, which fasten the connector to the panel in the same manner as the connector on the larger board is fastened. Electrical connection is via a short ribbon cable 8, terminated with a 14-pin dual-in-line plug. The components of the two printed circuit boards should end up facing each other.

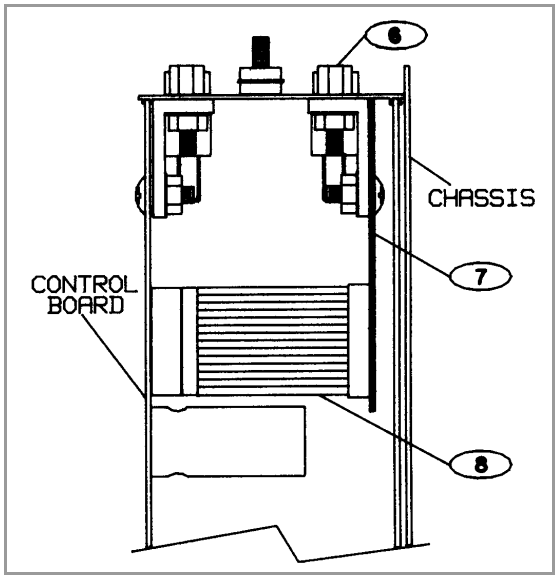

Figure 1-3 *Remote Input/Output Option.*

1.3.2.2 Single Digit Display

It is possible to blank the second digit in one or more lines of the display by cutting jumpers on the display printed circuit board. The second digit is retained internally, is used by the process control logic, and will be output via the computer interface. The decimal point will still be displayed even though the second digit is blanked. To disable the second digit:

1. Remove power from the control unit.
2. Open the hinged door. On the back of the door is a metal plate labeled with operating instructions. This plate is held in place by plastic retainers which may be flexed out of position allowing removal of the plate.
3. With the plate removed you will see the display printed circuit board (Figure 1-4). Locate 9, jumpers J1, J2, and J3.
4. Cut the jumper for the display line(s) for which you wish to disable the second digit; J1,J2, and J3 for the first, second, and third lines respectively.
5. Snap the backplate back into its retainers.

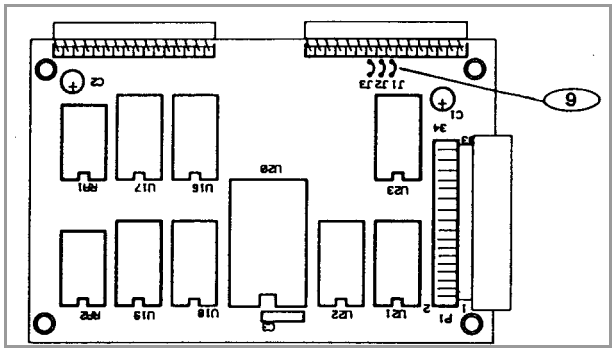

Figure 1-4 *Display Printed Circuit Board.*

1.3.3 Mounting Configurations

Figure 1-5 on page 21 illustrates the various configurations available for mounting the 307 control unit and power supply.

Note that when installing a mounting ear (10) into the left side of the control unit, the door should be open.

The bracket (13) used to connect two control units for side by side rack mounting is not symmetrical. Install as shown.

The rear support bracket assembly consists of a U-shaped bracket (12) which bolts directly to the power supply, and spring clamps (11) which grip into grooves in the side of the control unit. When purchased separately the assembly is provided with two clamps. Remove one or both as necessary when attaching to power supply enclosures rather than control units.

For configurations other than rack mounting, four brackets (14) are provided for attachment to the power supply.

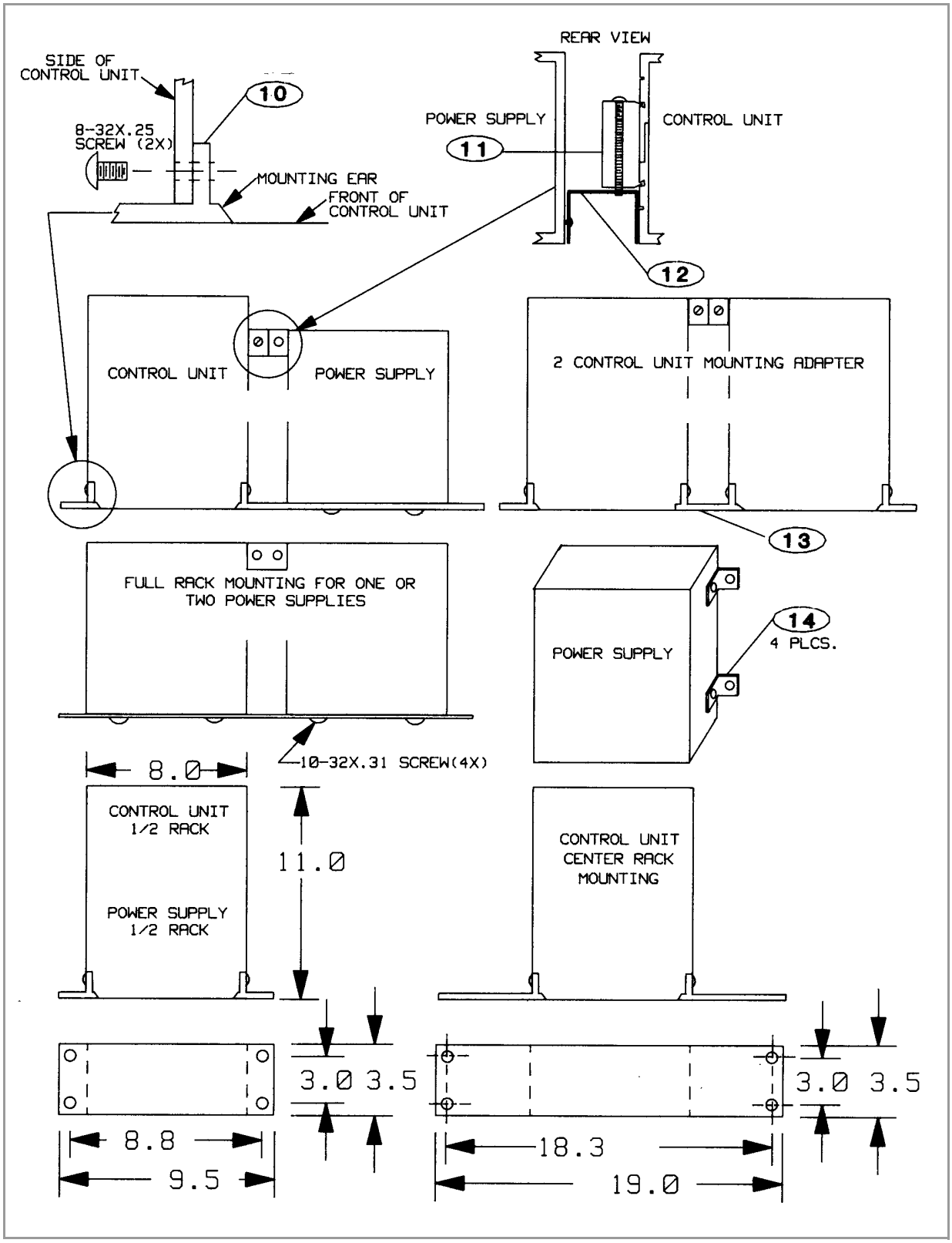

Figure 1-5 *Mounting Methods.*

1.3.4 Ionization Gauge Types and Installation

WARNING - Do not attach cables to glass gauge pins while the gauge is under vacuum. Accidental bending of the pins may cause the glass to break and implode. Cables once installed should be secured to the system to provide strain relief for the gauge tube pins.

WARNING - Ionization gauges are safe for use only if all exposed conductors on the gauge and on controller and on vacuum system are grounded.

Verify that the vacuum port to which the Ion Gauge is mounted is electrically grounded. It is essential for personnel safety as well as proper operation that the envelope of the gauge be connected to a facility ground. Use a ground lug on a flange bolt if necessary.

The 307 VGC is designed to operate 1 or 2 Bayard-Alpert type or equivalent ionization gauges. Coated Iridium filament type gauges are recommended if the filament auto-on feature is to be used. At higher pressures iridium filaments provide longer operating life and greater burnout resistance.

When installing your ion gauge, note that if placed near the pump, the pressure in the gauge may be considerably lower than in the rest of the system. If placed near a gas inlet or source of contamination, the pressure in the gauge may be higher.

If an unshielded gauge is placed near an electron beam evaporation source or used in a sputtering system, spurious electrons or ions may disturb the measurement. Screens or other shielding should be placed between the gauge and the system if spurious charged particles or severe electromagnetic interference is present. Consideration should also be given to electrostatic shielding of glass tubulated gauges when measuring pressures near their x-ray limits.

Granville-Phillips offers 3 cable types for ion gauges. One has a standard connector for the series 274 tubulated gauge tubes. One has individual pin sockets for use with non-standard pin configurations as well as with Granville-Phillips “nude” tubes. The third is for use with the Varian 564 wide range tube.

Figure 1-6 shows typical tube base configurations used with the standard connector cable. See for detailed cable diagrams.

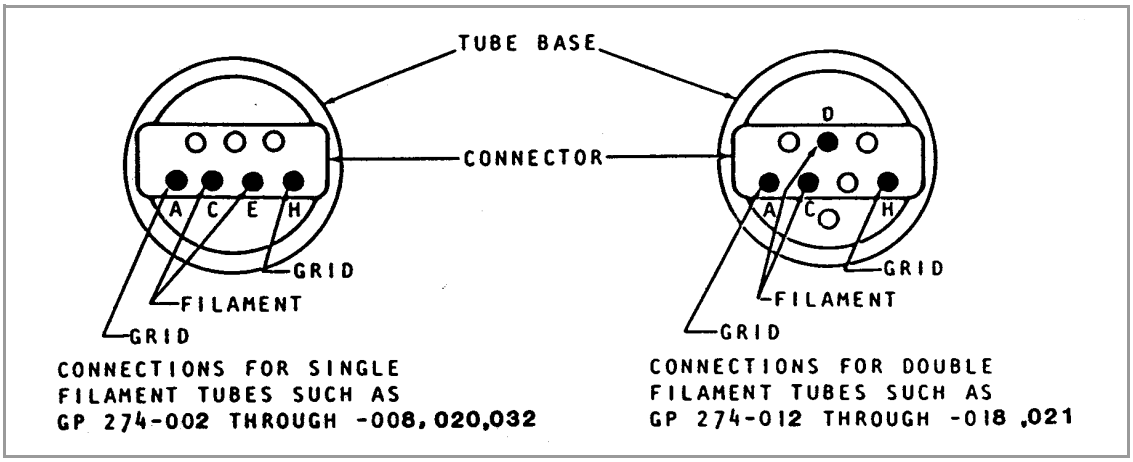

Figure 1-6 *Standard Tube Base Configurations.*

When connecting an individual pin socket type IG cable to an IG tube where electron beam degas will be employed using only one grid connection, the red socket lead should be used, not the brown one.

1.3.5 Cable Connections

The 307 VGC power supply is housed separately from the control unit, and feeds power to it via the supplied interconnecting cable. See Figure 1-7 for cable connections. Tighten screws to secure connectors.

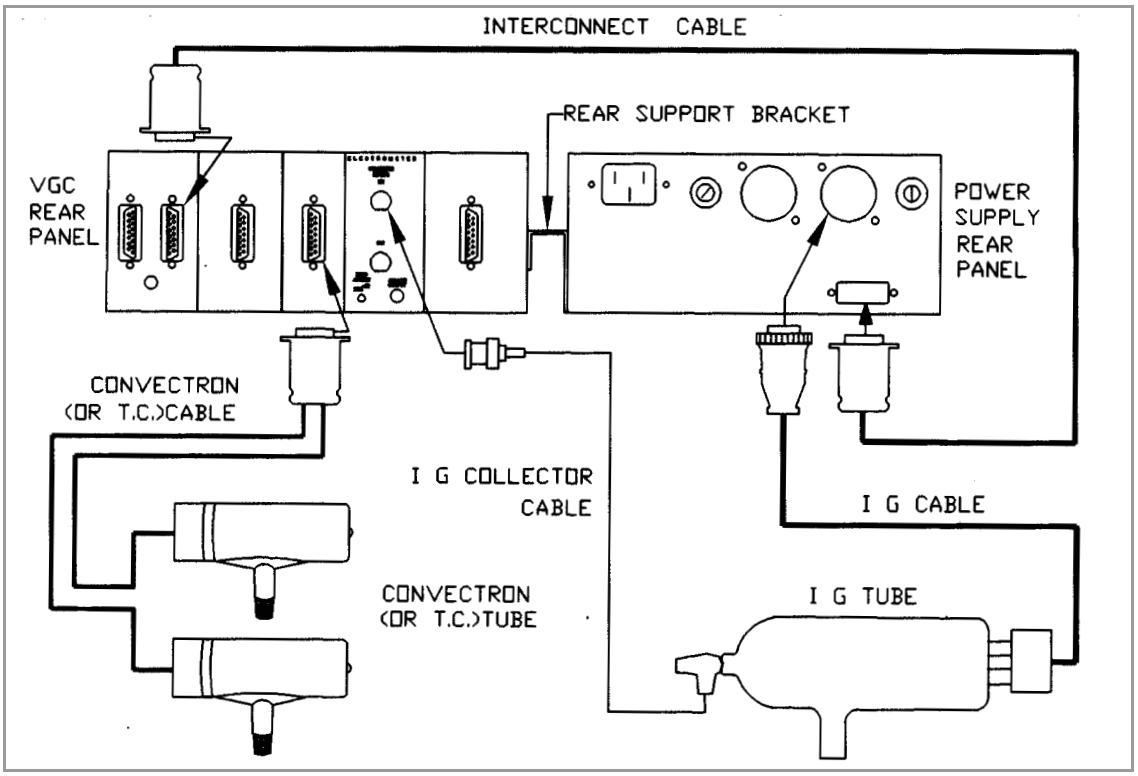

Figure 1-7 *307 VGC Cable Connections.*

The collector cable should be routed along the control cables for best noise immunity. See Figure 1-8.

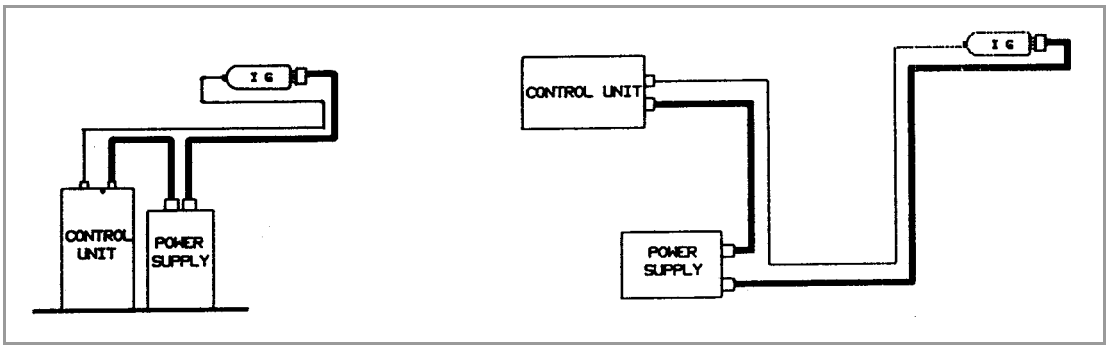

Figure 1-8 *Collector Cable Routing.*

1.3.6 System Ground Test Procedure

(Refer to the Safety Instructions Proper Grounding: on page 11 for further information)

1.3.6.1 Procedure

Physically examine the grounding of both the 307 power supply and the vacuum chamber. Is there an intentional heavy duty ground connection to all exposed conductors on the vacuum chamber? There should be. Note that a horizontal "O" ring or "L" ring gasket, without metal clamps, can leave the chamber above it electrically isolated. Power can be delivered to mechanical and diffusion pumps without any ground connections to the system frame or chamber. Water line grounds can be lost by a plastic or rubber tube interconnection. What was once a carefully grounded vacuum system can, by innocent failure to reconnect all ground connections, become a very dangerous device. Use the following procedure to test each of your vacuum systems which incorporates an ionization gauge.

This procedure uses a conventional Volt-Ohm Meter (VOM) and Resistor (10 ohm, 10 watt).

1. With the gauge controller turned off, test for both dc and ac voltages between the metal parts of the vacuum chamber and the power supply chassis.

2. If no voltages exist, measure resistance. The resistance should not exceed 2 ohms. Two ohms, or less, implies commonality of these grounds that should prevent the plasma from creating a dangerous voltage between them. This test does not prove that either connection is earth ground, only that they are the same. If more than 2 ohms is indicated, check with your electrician.

3. If ac or dc voltages exist and are less than 10 volts, shunt the meter with a 10 ohm, 10 watt resistor. Repeat the voltage measurement. With the shunt in place across the meter, if the voltage remains at 83% or more of the unshunted value, commonality of the grounds is implied. Repeat the measurements several times to be sure that the voltage ratio is not changing with time. If

$$\frac{\text{Voltage (shunted)}}{\text{Voltage (unshunted)}} = .83 \text{ or more,}$$

this should prevent the plasma from creating a dangerous voltage between these grounds. If more than 10 volts exists between grounds, check with your electrician.

4. If the voltage change in Step 3 is greater than 17% due to the placement of the shunt, it complicates the measurement. The commonality of the grounds may be satisfactory and the coupling poor, or the commonality could be poor! Your electrician should be asked to check the electrical continuity between these two ground systems. The placement of a second ground wire (dashed line in Figure 1-9 on page 26) between the vacuum chamber and the power supply chassis is NOT a safe answer, for large currents could flow through it. Professional help is recommended.

1.3.7 Grounding the System

1. Connect a heavy duty ground wire #12 AWG or larger from the ground lugs on the backs of the Power Supply and the Control Unit to your facility grounding electrode system. This will provide an earth ground for the Power Supply and for the Control Unit in the event either the interconnect cable or power cable are not in place. Do not connect the ground lug to the vacuum system or other component. Connect it directly to the facility grounding system such as a grounded outlet box or a grounded copper water supply pipe. Do not rely on small metal water lines to ground a component. Someone may replace the metal tubing with plastic tubing thus unwittingly causing a potentially dangerous situation.
2. Provide a connection to ground for other instruments with electrodes in the vacuum system possibly exposed to high voltage electrical discharges.
3. Provide a connection to ground for each ungrounded metal component in, on or around the vacuum system, including the gauge envelopes, which personnel may touch and which can potentially be exposed to high voltage electrical discharges within the vacuum system. For example, a metal bell jar resting on an organic O-ring must be connected to ground if an ionization gauge is to be used or if other high voltage sources are present in the vacuum system.

Compliance with the usual warning to connect the power cable only to a properly grounded outlet is necessary but not sufficient for safe operation of a vacuum system with this or any similar high voltage producing product. Grounding this product does not and cannot guarantee that other components of the vacuum system are all maintained at earth ground.

All conductors in, on, or around the vacuum system that are exposed to potential high voltage electrical discharges must either be shielded at all times to protect personnel or must be connected to earth ground at all times.

After each maintenance/service procedure and before operating the controller and vacuum system make sure that your vacuum system and controller are grounded as shown in the following schematic diagram. FAILURE TO DO SO COULD BE FATAL.

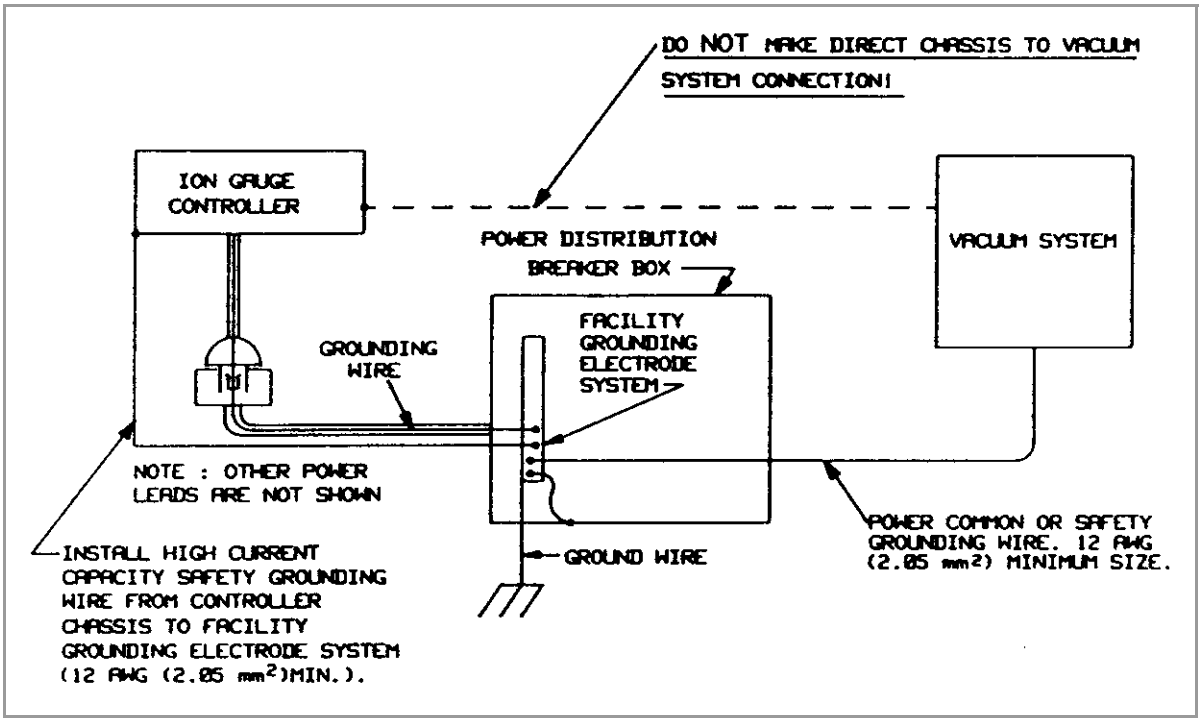

Figure 1-9 *Correct System Grounding.*

Be aware that an electrical discharge through a gas may couple dangerous high voltage directly to an ungrounded conductor almost as effectively as would a copper wire connection. A person may be seriously injured or even killed by merely touching an exposed ungrounded conductor at high potential.

This hazard is not unique to this product.

1.4 Operation

1.4.1 Summary of Controls and Indicators

A description of the controls and indicators found on a basic 307 VGC is given in this section. For detailed instructions pertaining to particular modules, please consult the chapter for that module.

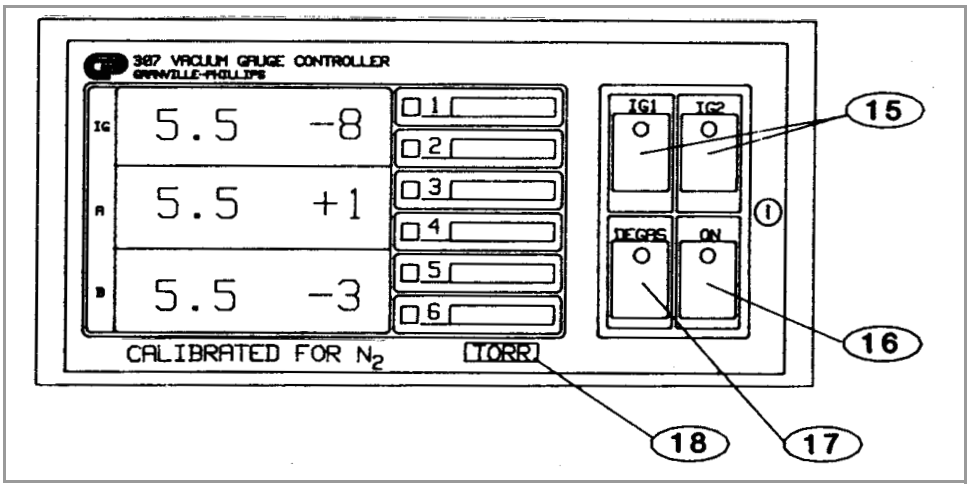

Figure 1-10 *307 VGC Control Unit Front Panel.*

1.4.2 Units of Measure

The units of measure displayed is selectable via switches on the electrometer, Convectron, and thermocouple modules. These units will be indicated on the front panel label when shipped from the factory. See the chapters for the specific module for instructions on changing units. The pressure units label (18) is part of the process control channel label and can be changed by the user if the system of units is changed. Slide the label out from the top.

> **WARNING - Since display units are set separately on the electrometer and Convectron or thermocouple gauge modules, adjustments must be made to both modules to avoid confusion. Be certain to update the label to reflect any change of units.**

(16) — **Power On/Off Toggle Key**

1.4.3 Ion Gauge On/Off

Ion gauges may be turned on or off in four ways: front panel keys, (15), remote control, auto-on function of Convectron or thermocouple gauge module, or via the RS-232, RS-485, or IEEE 488 computer interfaces. Two ion gauges can be operated sequentially and not simultaneously.

For use of the available Remote Input/Output option, see below. For use of the IG auto-on function of the Convectron or thermocouple gauge modules, see the instruction manual sections for those modules.

To turn on IG1 from the front panel, press the IG1 on/off button. To turn it off, press again. Note that if you attempt to turn on IG2 while IG1 is already on, IG1 will turn off automatically (and vice versa).

1.4.4 Degas On/Off

Degas may be turned on/off by either the front panel key, (17), the available remote input (see below), or the RS-232, RS-485, or IEEE 488 computer interface modules. To turn degas on, press the degas on/off key. To turn it off, press again.

Degas can not be activated unless the IG pressure is below 5×10^{-5} in torr/mbar units, or 6.6×10^{-3} in pascal units. Degassing a gauge above this pressure is of little value and may cause sudden pressure bursts that can damage the gauge and create plasma which couples grid voltages to the vacuum system hardware.

1.4.5 Remote Input/Output Option

Five inputs are provided through the rear panel allowing control of the ion gauges, degas, and lock-out of front panel keys (see Figure 1-11 on page 29). The function of the front panel keys is reproduced by either a contact closure or an active low logic state on these inputs. For DEGAS REMOTE and IG REMOTE inputs this low state must be held continuously for at least 25 milliseconds. After this, the input must be allowed to float high for at least 105 milliseconds before another low will be accepted. Front panel keys, other than the power key, will not function if the KEY DISABLE input is held continuously low. If IG LOCKOUT (asserted low) is pulled to a low voltage level and maintained low, the IG's cannot be turned on either from the front panel or through the computer interface. If the IG is on it will turn off when IG lockout is asserted.

Three single-pole, double-throw relays are provided: Two filament status relays (normally open = filament off), and status of the FAULT line (normally open = FAULT indication). See Section 1.7.2 on page 32 for a summary of possible sources of the FAULT indication. The FAULT line can be configured to output DEGAS status by changing the location of JP1 on the remote I/O option board.

Table 1-1 *Pin Assignments.*

Pin No.	Function
1	Key Disable*
2	Degas Remote*
3	Fault N.C.
4	Fault N.O.
5	Fault Com.
6	IG2 N.C.
7	IG2 N.O.
8	IG2 Com.

Pin No.	Function
9	IG1 Remote*
10	IG2 Remote*
11	IG lockout*
12	Ground
13	IG1 Com.
14	IG1 N.O.
15	IG1 N.C

* Asserted low inputs

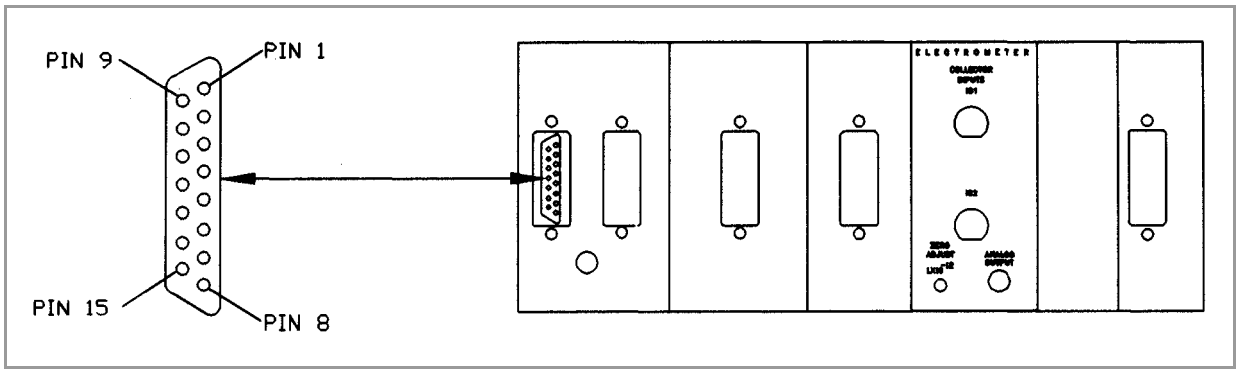

Figure 1-11 *Remote Control Connector.*

1.5 Theory of Operation

1.5.1 Ion Gauge Theory

The functional parts of a typical ionization gauge are the filament (cathode), grid (anode) and ion collector, shown schematically in Figure 1-12. These electrodes are maintained by the gauge controller at +30, +180, and 0 Vdc, relative to ground, respectively.

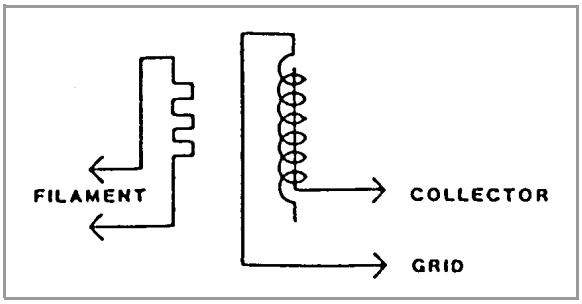

Figure 1-12 *Ion Gauge Schematic.*

The filament is heated by direct current to such a temperature that electrons are emitted, and accelerated toward the grid by the potential difference between the grid and filament. All the electrons eventually collide with the grid, but many first traverse the region inside the grid one or more times.

When an energetic electron collides with a gas molecule, an electron may be dislodged from the molecule, leaving it with a positive charge. Most ions are then accelerated to the collector. The rate at which electron collisions with molecules occur is proportional to the density of gas molecules, and hence the ion current is proportional to the gas density (or pressure, at constant temperature).

The amount of ion current for a given emission current and pressure depends on the ion gauge design. This gives rise to the definition of ion gauge “sensitivity”, frequently denoted by “K”:

K = ion current / (emission current x pressure)

Bayard-Alpert type gauges typically have sensitivities of 10/Torr when used with nitrogen or atmosphere. Sensitivities for other gases are given in Section 2.3 on page 38.

The ion gauge controller varies the heating current to the filament to maintain a constant electron emission, and measures the ion current to the collector. The pressure is then calculated from these data.

Ion gauge degas is accomplished by either electron bombardment (EB) or resistance heating (I^2R) depending on which, if either, you have selected.

During EB degas, the grid voltage is raised to 500 volts and the electron current is increased. The electrons acquire a high energy when accelerated through this potential difference and strike the grid, heating it to a temperature sufficient to free it of contamination.

During I^2R degas, a large current is passed through the grid structure, raising its temperature and driving off contaminants. Note that some ion gauge designs don't allow I^2R degas.

In either case, pressure measurement is possible during degas, but large fluctuations may be seen as contaminants are driven off the IG components.

1.5.2 Microcontrollers and Bus Structure

Each module in the 307 has a dedicated microcontroller with internal ROM, RAM, timing, and interrupt management functions. This architecture provides high-performance at low cost with greater reliability and noise immunity than more complicated microprocessor systems using external buses and memory hardware.

Each microcontroller is equipped with a watchdog timer, which automatically generates a reset if the processor fails to fulfill timing “checkpoints” within its code.

Inter-processor communication is accomplished via the display bus. These lines carry BCD-format pressure data which is used to generate the 307 display. The bus is updated once per millisecond. Out of every sixteen cycles, fifteen cycles are used for display data, and one is reserved for inter-processor communication. Modules that require pressure data, such as process control and computer interface, take it directly from the display update cycles.

1.6 Calibration

Calibration instructions for each module, where relevant, may be found in the chapters for individual modules. Adjustments found within the power supply are:

19 — Filament Current Limit

Do not adjust.

20 — Grid Bias Potential Adjustment

The grid bias for the ion gauges is factory set to 180 ±10 Vdc, as required by the vast majority of gauges. This can be adjusted via the grid bias potentiometer. The range is approx. 120-220 Vdc.

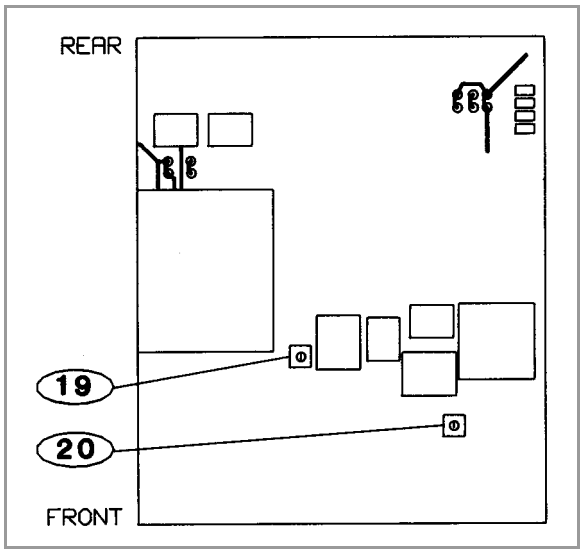

Figure 1-13 *Grid Voltage Adjustment, Power Supply PC Board.*

1.7 Troubleshooting, Basic 307 Vacuum Gauge Controller

1.7.1 Guidelines

Further troubleshooting information is located in the chapters for specific modules.

The 307 VGC has been designed for easy repair by replacement of modules.

If the user elects to perform repairs at the component level, repairs properly made with equivalent electronic parts and rosin core solder do not represent a violation of the warranty.

Some minor difficulties are user-correctable, and the built-in diagnostic aids described here may be helpful.

Each module has status LEDs which will aid in localizing failures. These are described in the troubleshooting section of the chapters for each module. Shown in Figure 1-15 on page 33 are those LEDs found on the 307 VGC control board. This is the PC board on the right side (when viewed from the front) of the 307 control unit, which attaches to the front panel keys via a short ribbon connector.

Since the 307 VGC contains static-sensitive electronic parts, the following precautions must be followed when troubleshooting:

a. Use a grounded, conductive work surface.

b. Use conductive envelopes to store or ship MOS devices or printed circuit boards.

c. Do not operate the 307 VGC with MOS devices removed from the unit.

d. Do not handle MOS devices more than absolutely necessary, and only when wearing a ground strap.

e. Do not use an ohmmeter for troubleshooting. Rely on voltage measurements.

f. Use grounded-type soldering irons only.

Danger, High Voltage

High voltages are present within the power supply, capable of causing injury or death. Do not touch cable connections or inside of the power supply when power is applied.

1.7.2 Fault Indications

When supplied with the Remote Control Module, the 307 VGC is also equipped with a “fault” relay (see Figure 1-11 on page 29). The relay is energized when no fault conditions are detected. It releases under a number of conditions described in Troubleshooting Guide.

Table 1-2 *Troubleshooting Guide, Basic 307 VGC.*

Symptom	Possible Cause
Unit won't power-up, no response to power switch.	Power fuse 21 blown. Wrong line voltage selection, see Figure 1-1 on page 17.
Power fuse 21 blows repeatedly.	Wrong fuse rating. Wrong line voltage selection, see Figure 1-1 on page 17.
Fault relay released.	Collector input from IG unplugged. Watchdog reset occurring on some module (probable circuit failure). Unplugged Convectron gauge or sensor broken in Convectron gauge. Convectron gauge zero badly out of calibration. Checksum failure on process control board. Cycle power and check all setpoints.
IG won't come on, or comes on briefly then shuts off.	Broken filament in IG. System pressure above overpressure shutoff point. Badly contaminated IG. Electrostatic charge buildup on glass wall of IG. Short between IG electrodes. Improper IG connector hookup. Ion gauge is a low-maximum emission gauge and Ie switch is on 10 mA.
Degas won't come on.	System pressure above 5 x 10^{-5} Torr. Degas fuse blown, 22. IG not turned on. Badly contaminated IG.
IG pressure reads extremely low.	Collector unplugged.
IG pressure very noisy.	IG badly contaminated. Bad collector cable.
LED 23 out on control board.	15 volt power to relays bad.
LED out, 24.	+12 volt supply bad (power to analog circuitry and RS232).
LED out, 25.	-12 volt supply bad (power to analog circuitry and RS232).
LED out, 26.	5 volt power to display LED's bad.
LED out, 27.	5 volt logic supply bad.

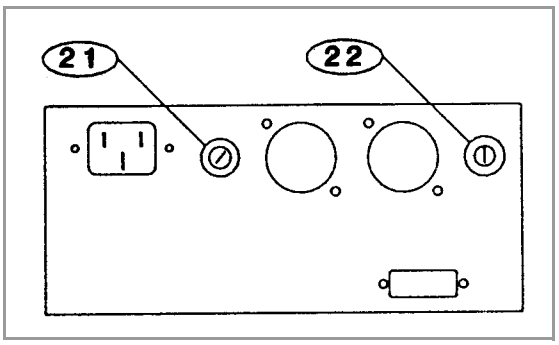

Figure 1-14 Power Supply Rear Panel.

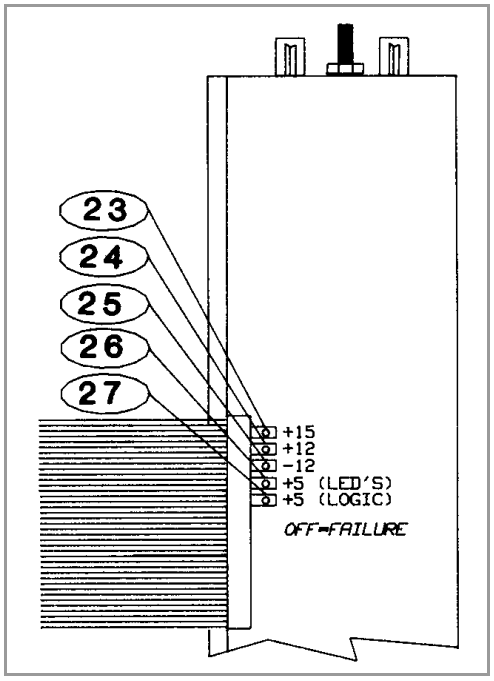

Figure 1-15 Control Board Top View.

1.7.3 Repair Ordering

Telephone Brooks Automation, Inc./Granville-Phillips to obtain a return authorization prior to returning your unit for repairs.

A repair order should accompany returned equipment even when the equipment is being returned for a warranty repair at no charge. This should include a detailed description of the problem in addition to your name, telephone number and address where we may contact you. Equipment returned for repair should be carefully and strongly packaged to withstand shipping abuse. Components or printed circuit boards to be returned separately should be protected against static damage by wrapping them in static proof containers or in aluminum foil prior to packaging them for shipment. Address replacement/repair orders and correspondence to the address given on the title page of this manual.

If a replacement module is desired, it is important that you give our Service Department the complete catalog number of the module. This will help ensure that you receive the correct replacement.

> *NOTE: Under no circumstances will Brooks Automation, Inc./Granville-Phillips be liable for shipping damages due to rough handling, improper packaging, or other circumstances beyond its control.*

All return shipments must be freight prepaid.

1.8 Specifications

See the chapters for each module for additional specifications relating to that module.

Table 1-3 *Specifications, Basic 307 Vacuum Gauge Controller*

Physical	
Control Unit	
Width Height Depth Weight	241 mm (9.5 in.) with 1/2 rack mounting ears 89 mm (3.5 in.) 356 mm (14 in.) includes 76 mm (3 in.) for connectors and cables 3 kg (6.5 lb.)
Power Units	
Width Height Depth Weight	203 mm (8 in.) 89 mm (3.5 in.) 330 mm (13 in.) includes 89 mm (3.5 in.) for connectors and cables 4 kg (8.5 lb.)
Electrical	
Voltage Frequency Power	90-130 Vac or 180-260 Vac 50 or 60 Hz 250 watts max.
Fuse Ratings -Line fuse -Degas fuse	3 A (90-130 V), 1.5 A (180-260 V), 250 Vac 2 A (90-130 V), 1 A (180-260 V) 250 Vac
Environmental Operating Temperature	0 °C to 40 °C
Electronic Accuracy	Typical ±3% of reading at ambient temperature = 25 ± 5 °C
Display Resolution	Scientific notation, 2 significant digits
Display Update Time	0.5 sec typical
Filament Status Relay Contact Rating	4 A, 250 Vac resistive load or 30 Vdc

1.9 307 Extended Capability Vacuum Gauge Controller

In the extended configuration the 307 VGC is a full-rack instrument (with separately mounted power supply) that provides up to 6 displays, 7 transducers, and 12 process control channels. The extra capacity is provided in a second chassis mounted side by side, to the right of the 307 VGC control unit. The power supply is mounted separately.

The second control chassis may be equipped with 3 Convectron (CG) or thermocouple (TC) gauges, and an additional process control board with either 2 or 6 relays. A single-gauge (CG or TC) module drives the fourth display line (the first display line of the second chassis), and a dual-gauge (CG or TC) module drives the second two displays of the second chassis.

Please refer to chapters 3, 4, 5, 6, 7, 8 and 9 for information on the use of Convectron gauges, thermocouple gauges, 307 process control modules, and computer interfaces, respectively. All the information in these chapters applies to the extended configuration, with the following exceptions:

1.9.1 Gauges

The extended chassis adds additional Convectron or thermocouple gauges only, not additional ion gauges.

The 3 additional gauges in the second chassis cannot be used to automatically turn on the ion gauges.

1.9.2 Process Control (C, D and E)

This additional process control module provides relays in pairs that are associated with each display line. The 3 additional displays are labeled “C”, “D”, and “E”, and are associated with process control channels 1 and 2, 3 and 4, 5 and 6, respectively.

The ion gauge assignment DIP switches on the process control module will be factory set as if to assign channels 1 and 2 to IG1. This does not cause these 2 relays to be activated by IG1, but rather enables these channels to accept data from display line “C” of the extended chassis. These switch settings should not be changed.

1.9.3 Computer Interface

All of the pressure and process control status data from up to 6 displays and 12 process control channels is accessible via a single computer interface module (RS-232 or IEEE 488).

The 307 extended capability computer interface no longer supports the talk-only mode. If this mode is necessary for your application, contact a Granville-Phillips application engineer.

The extended capability computer interface has the same command syntax as the standard 307 interface, with the following additions:

- The DS command has additional modifiers CG3, CG4 and CG5 which return the pressure from the 3 gauges in the second expansion chassis.

Example 1 – *Display pressure from display line “D”, the fourth low-vacuum transducer and the fifth display line in the extended configuration:*

From computer: DS CG4 CRLF

From 307: 3.70E-1CRLF

indicates this transducer is reading a pressure of 3.7×10^{-1}.

- The DS command allows as modifiers the numbers 1 through 6 to display the contents of display lines 1 through 6.

Example 2 – *Display pressure from display line "D", which is the fifth display in the extended configuration:*

From computer: DS 5 CRLF

From 307: 3.70E-1CRLF

thus, the modifiers 1-6 perform exactly as the modifiers "IG", "CG1" through "CG5", but have been added to provide a simpler command syntax.

- A new command PC2S has been added. This command functions in the same way as the PCS command, but refers to the process control channels residing in the second chassis, if installed.

Example 3 – *Assume that channels 1-3 in the second chassis are active, and 4-6 are inactive:*

Interrogate the status of the third channel in the second chassis:

From computer: PC2S 3 CRLF

From 307: 1CRLF

return a string giving the status of all 6 channels in the second chassis:

From computer: PC2S CRLF

From 307: 1,1,1,0,0,0CRLF

2.1 Introduction

This chapter covers both the standard and Ultra-High Vacuum (UHV) electrometers. **Information which applies only to the UHV module will be shown in bold type.**

The standard ion gauge (IG) Electrometer Module provides ion gauge pressure readout from 1×10^{-10} Torr (1.3×10^{-10} mbar or 1.3×10^{-8} Pascal) to 1×10^{-1} Torr, air equivalent, depending on the transducer and emission current used. The control unit sequentially operates 1 or 2 ion gauges, depending on power supply configuration.

Adjustments are provided for gauge sensitivity and emission current. Internal switches allow change to Pascal pressure units, and a user selectable "slow update" feature triggers measurement averaging, resulting in a display update frequency of about once every three seconds. The overpressure shutdown threshold is internally adjustable.

Internal failure-indicator LEDs aid diagnosis of problems by indicating certain out-of-bounds electronic conditions.

The UHV module provides pressure measurement to 5×10^{-12} Torr. This module also offers independent sensitivity and emission current control for each ion gauge, and adjustable degas power when used with electron-bombardment (EB) degas.

2.2 Installation

2.2.1 Units of Measure

Your unit was shipped from the factory pre-set to display the units of measure, Torr/millibar or Pascal, that you requested. If you want to change units, proceed as follows:

1. Shut off power to the control unit.
2. Remove the top cover. Locate the IG Electrometer Module.
3. Locate (28) , the display units control switch.
4. Set the switch to the desired position, OFF = Torr/mbar units, ON = Pascal units.
5. Change the units of measure on the Convectron or thermocouple gauge module, if installed.
6. Slip the label card out of the top of the front panel and apply the appropriate pressure units label.

Selection between Torr and mbar units is done by adjusting the IG tube sensitivity to the appropriate units. For example, a typical Bayard-Alpert tube has a sensitivity of 10/Torr or 7.5/mbar. Thus, for this tube, adjusting the sensitivity to 10 will result in display of pressure in Torr. Adjusting to 7.5 will result in display in mbar.

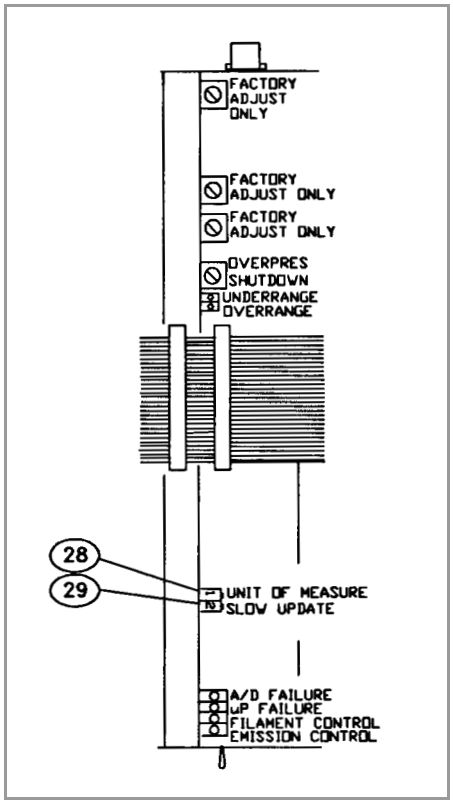

Figure 2-1 *Ion Gauge Electrometer Module, Top View.*

29 — Display Update Rate Switch

Setting this switch "ON" enables pressure averaging. The display will update about every 3 seconds rather than the normal 0.5 sec typical period.

2.3 Operation

2.3.1 Ion Gauge On/Off and Degas On/Off

See Section 1.4 Operation on page 27 for instructions on turning ion gauges on and off, and turning degas on and off.

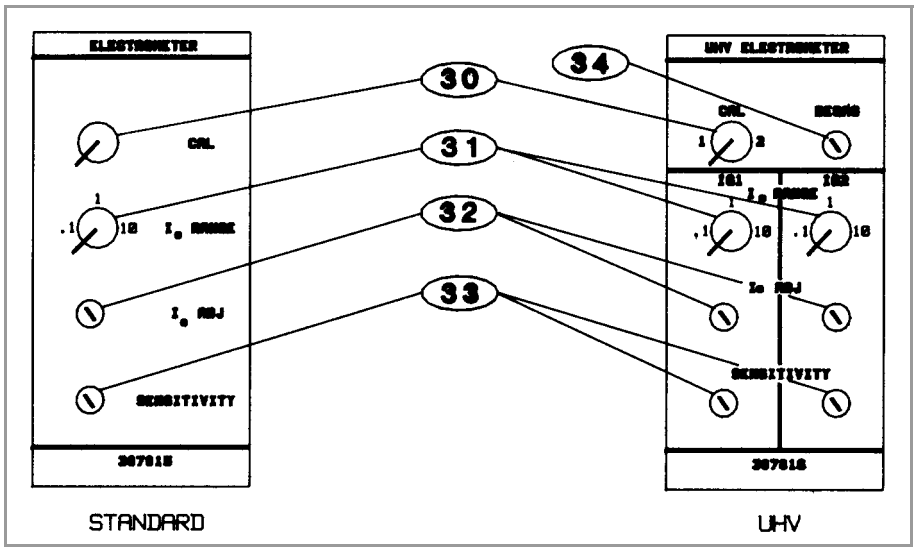

Figure 2-2 Electrometer Module Front Panel.

30 — Displaying Sensitivity and Emission With the Calibration Switch

This switch is used for displaying gauge sensitivity, emission current, and (when used with EB degas) degas power when these parameters must be checked or adjusted.

This switch is activated by setting either to the left or right. **On the UHV module, setting to the left invokes the function for IG1, and to the right for IG2.** The function depends on the state of the ion gauge tube:

- If the tube is off, setting the switch displays the tube sensitivity in the top display.
- If the tube is on but not degassing, the switch displays emission current in amperes.
- If the tube is degassing with electron-bombardment degas, the switch displays degas power in watts.
- If the tube is degassing with resistance-degas, the switch displays emission current in amperes.

WARNING - Do not leave the calibration switch set after you are done viewing sensitivity, emission, or EB degas power. There is no indication on the front panel that the display holds data other than pressure.

Since the process control and computer interface modules take their pressure data directly from the display, pressure data is periodically substituted for emission data when the tube is on and emission or EB degas power is being displayed. This results in some flicker in the display.

31 — Emission Range Switch

This switch selects between three emission ranges; 0.1 milliampere, 1.0 milliampere, or 10.0 milliampere. Adjustment within each range is achieved with the emission adjustment pot (see below).

On the UHV module, 2 independent emission range switches are provided, one for each gauge.

In general, higher emissions are used at lower pressures. If, for example, you are using a broad range IG tube and wish to measure to its upper pressure limit, the 0.1 mA range is recommended. If you are measuring very low pressures or have a low-sensitivity IG tube, the 10.0 mA range is better. In general, lower emissions will increase tube life.

> *NOTE: Changing the emission range by one decade will also change the overpressure shutdown point by one decade. See Section 2.4 on page 42 for details of the overpressure shutdown adjustment. Adjustment of emission within a range (see below) will not affect the overpressure shutdown point.*

32 — Emission Adjustment

This potentiometer provides control of the emission within the decade value selected by the emission range switch. The calibration switch must be set with the IG tube turned on to view emission during adjustment. The span of adjustment is from approximately 10% to 120% of the range value.

On the UHV module, 2 independent potentiometers are provided, one for each IG.

Please note that on some earlier generation IG controllers, the emission current adjustment was used to correct for varying tube sensitivities. This is not appropriate on the 307 controller, as an independent sensitivity adjustment is provided (see below).

33 — Sensitivity Adjustment

This adjustment is used to match tubes of different sensitivities. The calibration switch 30 must be set with the IG off to view sensitivity during the adjustment.

The control unit is shipped from the factory set for a tube sensitivity of 10/Torr, as is typical for glass tubulated Bayard-Alpert type tubes such as the Granville-Phillips 274. UHV nude gauge tubes such as the 274022, 274023 and Varian UHV-24 typically have a sensitivity of about 25/Torr. If an ionization gauge tube of this type is being used, the sensitivity potentiometer should be adjusted for the proper sensitivity (25/Torr). Otherwise, measurement error will result. The approximate range of the adjustment is 3 to 50/Torr.

2.3.2 Relative Gas Sensitivities

Sensitivity depends on the gas being measured as well as the type of IG tube. Table 2-1 on page 2-40 lists the relative gauge sensitivities for common gases. These values are from NASA Technical Note TND 5285, "Ionization Gauge Sensitivities as Reported in the Literature", by Robert L. Summers, Lewis Research Center, National Aeronautics and Space Administration. Refer to this technical note for further definition of these average values and for the gauge sensitivities of other gases.

To adjust the 307 VGC to be direct reading for gases other than air or N2, calculate the sensitivity Kx for gas type x as follows:

$$K_X = (R_X)\ (KN_2)$$

Where KN_2 is the gauge sensitivity for N_2 and R_X is found from Table 2-1 on page 40.

Table 2-1 *Relative Gas Sensitivities.*

Gas	Rx	Gas	Rx
He	0.18	H_2O	1.12
Ne	0.30	NO	1.16
D_2	0.35	Ar	1.29
H_2	0.46	CO_2	1.42
N_2	1.00	Kr	1.94
Air	1.00	SF6	2.5
O_2	1.01	Xe	2.87

34 — Degas Power Adjustment

The UHV module allows adjustment of degas power, when used with EB degas, from approximately 10 watts to 40 watts.

35 — Analog Output

This voltage output signal is proportional to the common logarithm of pressure. If graphed on "log-linear" axes the output voltage is linear with respect to the log of pressure. The analog output is 1 volt per decade of pressure with 0 volts out at 1.0×10^{-12} Torr when the emission current range is set to 10 mA. Note that the emission current range setting affects the scaling of the analog output (see Figure 2-4 on page 41). When the IG is turned off, the output will switch to slightly greater than +10 Vdc.

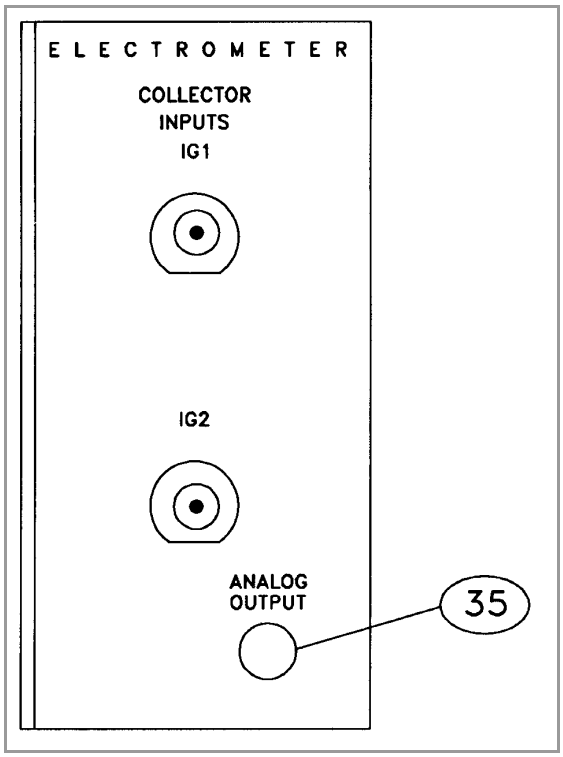

Figure 2-3 *Electrometer Module Back Panel.*

The UHV electrometer option (307507-8) switches in a preamplifier as pressure decreases at an ion (collector) current of 10^{-10} A. For example, this corresponds to a pressure of 10^{-9} Torr with 10 mA emission current. When this switching occurs, there will be a brief (about 2 s duration) drop in the analog output signal. After the electrometer has settled out, the signal is, again, proportional to the common logarithm of pressure as shown by the UHV ONLY area of Figure 2-4.

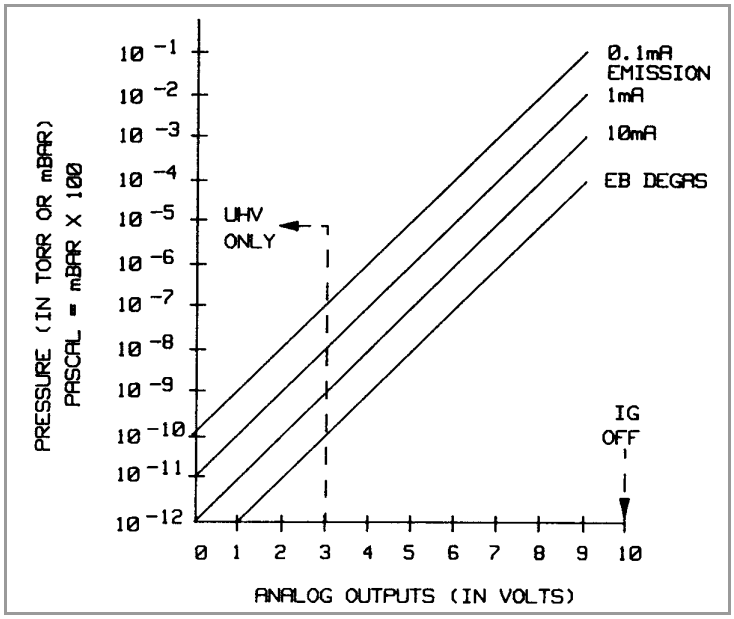

Figure 2-4 *Ion Gauge Pressure Analog Output.*

A standard 1/8 in. miniature phono jack connector and plug are supplied.

The characteristics of this type of analog output voltage are ideal for applications requiring closed loop control. The voltage signal is smooth and continuous throughout all the decades of pressure measurement. This format is useful for computerized data acquisition because a simple equation (finding the common antilogarithm) may be programmed to calculate pressure from the voltage output.

The equation is:

$$P = 10^{(V-n)}$$

Where V = analog output voltage;
n = 12 for the 10 mA emission current range;
n = 11 for the 1 mA emission current range;
n = 10 for the 0.1 mA emission current range.

For example, if emission current is set to the 1 mA range and the analog output voltage is 3.25 volts, the pressure (in units selected) may be determined by raising 10 to the power (V-11) or

$$P = 10^{(3.25-11)} = 1.8 \times 10^{-8} \text{ (Torr, for example)}$$

2.4 Electrometer Calibration

Refer to Section 2.3 for instructions on calibrating ion gauge sensitivity and emission current.

Note that the two ion gauge collector inputs are in common so calibration inputs may be applied to either.

37 — 1 x 10-^{9} Calibration Adjustment

This potentiometer calibrates the electrometer for very low inputs. Factory set, do not adjust. Contact a Granville-Phillips application engineer for further information.

38 — Electrometer Scale Adjustment

This is a factory calibration point and should not normally be changed by the user.

39 — Overpressure Shutdown Adjustment

This control is factory set so the ion gauge will shut down when the pressure rises above the following levels:

Emission Current (milliamperes)	Overpressure Point (Torr)
0.1 range	1×10^{-2}
1.0 range	1×10^{-3}
10.0 range	1×10^{-4}

The overpressure shutoff point does not depend on the adjustment of the emission level within a range.

To adjust the overpressure shutoff point to a different level:

1. Maintain system pressure at the desired shutoff point.
2. Rotate the overpressure adjustment potentiometer fully counter-clockwise.
3. Turn on the ion gauge.
4. Rotate the adjustment pot clockwise slowly until the IG turns off.

42 — A/D Calibration

Factory set, do not adjust.

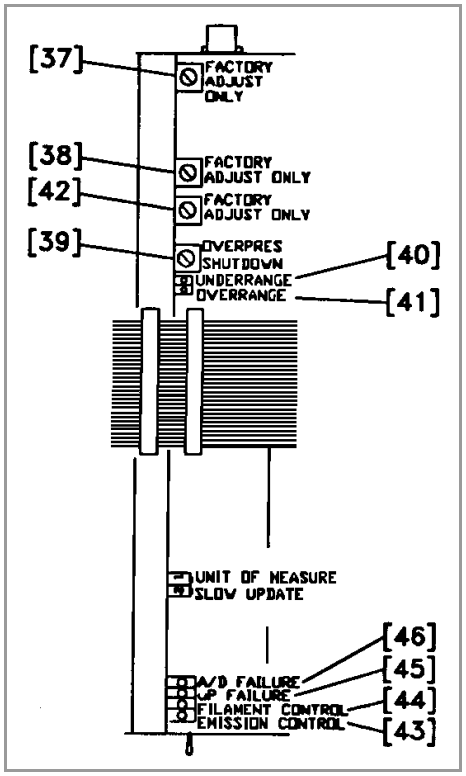

Figure 2-5 *Ion Gauge Electrometer Module, Top View.*

2.5 Electrometer Troubleshooting

Symptom	Possible Cause
Electrometer underrange indicator (40) lit.	Ion gauge collector unplugged. Collector cable defective. Failure of electrometer electronics.
Electrometer overrange indicator (41) lit.	Failure of electrometer electronics.
LED (43) or (44) emission under/over current indicator lit.	Failure of emission control under/over current indicator circuitry. Not necessarily a failure on the electrometer board, unless lit continuously. Other possibilities include: short circuit in IG cable, IG tube failure, IG power supply failure.
Microprocessor reset LED (45) lit or flashing.	Microprocessor failure.
A/D integration failure LED (46) lit.	IG collector unplugged.

2.6 Electrometer Module Specifications

Gauge Type	Bayard-Alpert or compatible hot filament I.G.			
Pressure Range	Emission Range			
		.01 to .1 mA	.1 mA to 1 mA	1 mA to 10 mA
	Readable to: Standard Electrometer	$1x10^{-8}$ to $1x10^{-1}$ Torr $1x10^{-9}$ Torr	$1x10^{-9}$ to $1x10^{-2}$ Torr $1x10^{-10}$ Torr	$1x10^{-10}$ to $1x10^{-3}$ Torr $1x10^{-11}$ Torr
	Readable to: UHV Electrometer	$5x10^{-10}$ to $1x10^{-1}$ Torr	$5x10^{-11}$ to $1x10^{-2}$ Torr	$5x10^{-12}$ to $1x10^{-3}$ Torr
Gas Type	N/A			
Electronic Accuracy	Typically ± 3% of reading at ambient temperature = 25 ± 5 °C.			
Resolution of IG Readout	Scientific notation, 2 significant digits.			
Display Update Time	0.5 sec typical Switch selectable to 3 sec/reading, averaged.			
IG Tube Sensitivities	3/Torr to 50/Torr (factory setting is 10/Torr).			
Emission Current	10 µA to 10 mA in 3 decade ranges (factory setting is 1 mA)			
Collector Potential	0 V			
Grid Potential	+180 V			
Filament Potential	+30 V			
Filament Current	0 - 6 A			
Degas	EB: 10-40 watts (derate to 35 watts at 100 V line). I^2R: 8 V, 10 A maximum (derate to 7V at 100V line). Power to gauge a function of cable length. Not recommended for standard cable lengths over 50 ft. Consult factory.			
Analog Output	0-10 V; Logarithmic; 1 V/decade.			

NOTE: Internal overpressure limiter is factory adjusted to trip at 1-decade below the upper limits specified above. See Section 2.4 Electrometer Calibration on page 42 for readjustment instructions.

3.1 Safety Instructions

SAFETY PAYS. THINK BEFORE YOU ACT. UNDERSTAND WHAT YOU ARE GOING TO DO BEFORE YOU DO IT. READ THIS INSTRUCTION MANUAL BEFORE INSTALLING, USING, OR SERVICING THIS EQUIPMENT. IF YOU HAVE ANY DOUBTS ABOUT HOW TO USE THIS EQUIPMENT SAFELY, CONTACT THE GRANVILLE-PHILLIPS PRODUCT MANAGER FOR THIS EQUIPMENT AT THE ADDRESS LISTED ON THIS MANUAL.

3.1.1 Explosive Gases

Do not use the gauge tube to measure the pressure of combustible gas mixtures. The sensing element normally operates at only 125 °C but it is possible that momentary transients or controller malfunction can raise the sensor above the ignition temperature of combustible mixtures which might then explode causing damage to equipment and injuring personnel.

3.1.2 Limitation on Use of Compression Mounts

Do not use a compression mount (quick connect) for attaching the gauge tube to the system in applications resulting in positive pressures in the gauge tube. Positive pressures might blow the tube out of a compression fitting and damage equipment and injure personnel. The Convectron gauge should not be used above 1000 Torr (1333 mbar or 1.33×10^5 Pa).

3.1.3 Tube Mounting Position

If the gauge tube will be used to measure pressures greater than 1 Torr or 1 mbar, the tube must be mounted with its axis horizontal. Although the gauge tube will read correctly below 1 Torr when mounted in any position, erroneous readings will result at pressures above 1 Torr if the tube axis is not horizontal. Erroneous readings can result in over or underpressure conditions which may damage equipment and injure personnel.

3.1.4 Overpressure

Do not use Convectron gauges above 1000 Torr true pressure. Series 307 instruments are furnished calibrated for N_2. They also measure the pressure of air correctly within the accuracy of the instrument. Do not attempt to use a Convectron gauge calibrated for N_2 to measure or control the pressure of other gases such as argon or CO_2, unless accurate conversion data for N_2 to the other gas is properly used. If accurate conversion data is not used or improperly used, a potential overpressure explosion hazard can be created under certain conditions.

For example, at 760 Torr of argon gas pressure, the indicated pressure on a Convectron gauge calibrated for N_2 is 24 Torr. At an indicated pressure of 50 Torr, the true pressure of argon is considerably above atmospheric pressure. Thus if the indicated pressure is not accurately converted to true pressure, it is possible to overpressure your system. Overpressure may cause glassware such as ionization gauges to shatter dangerously, and if high enough may cause metal parts to rupture thus damaging the system and possibly injuring personnel. See Section 3.4 Convectron Operation on page 50 for proper use of conversion data.

A pressure relief valve should be installed in the system should the possibility of exceeding 1000 Torr exist.

3.1.5 High Indicated Pressure

For some gases, be aware the indicated pressure will be higher than the true pressure. For example, at a true pressure of 9 Torr for helium the indicated pressure on a Convectron gauge calibrated for N_2 is 760 Torr. The safe way to operate the gauge is to properly use accurate conversion data. See Section 3.4 Convectron Operation on page 50 for proper use of conversion data.

3.1.6 Chemical

Cleaning solvents, such as trichloroethylene, perchloroethylene, toluene and acetone, produce fumes that are toxic and/or flammable. Use only in areas well ventilated to the outdoors and away from electronic equipment, open flames, or other potential ignition sources.

3.1.7 Sensor Failure

If the gauge tube becomes disconnected from the controller or if the sensor wire in the gauge tube fails, the controller will indicate 9.9E+9. If the tube is unplugged from a powered controller, there may be an instantaneous (0 to 0.2 seconds) drop in the pressure indication and the process control relays could activate for this brief time, depending on the order in which the tube pins break contact.

3.1.8 Tube Contamination

The calibration of the gauge will be seriously affected by any gas which will attack the gold plated sensor, and could result in overpressurizing the system. Two primary gases in this category are mercury vapor and fluorine.

3.2 Convectron Module, Introduction

The Convectron Gauge (CG) Module provides pressure measurement from 1.0 x 10^{-3} Torr (1.3 x 10^{-3} mbar or 1.3 x 10^{-1} Pa) to 1000 Torr, and one meaningful digit pressure indication down to 1 x 10^{-4} Torr, air equivalent. Two transducers are displayed simultaneously in the second and third display lines, and are denoted here by "CGA" and "CGB" respectively.

Analog output (logarithmic in pressure, 1 volt per decade) is also provided. The Convectron can also be used to automatically turn on or off an ion gauge. When used with the Process Control Module, the two gauges control four setpoints, in addition to the ion gauge turn-on setpoints.

3.3 Convectron Installation

3.3.1 Units of Measure

Your instrument will have been shipped from the factory pre-set to display the units of measure, torr, millibar, or pascal, that you requested. If you wish to change units, proceed as follows:

1. Shut off power to the control unit.
2. Remove the top cover. Locate the Convectron Module.
3. Locate (47) the millibar and (48) pascal units switches.
4. Leave both switches open for Torr units. Close the appropriate switch for either millibar or pascal units.
5. Modify the units of measure of the electrometer to be consistent with the Convectron.
6. Slip the label card out of the top of the front panel and apply the appropriate pressure units label.

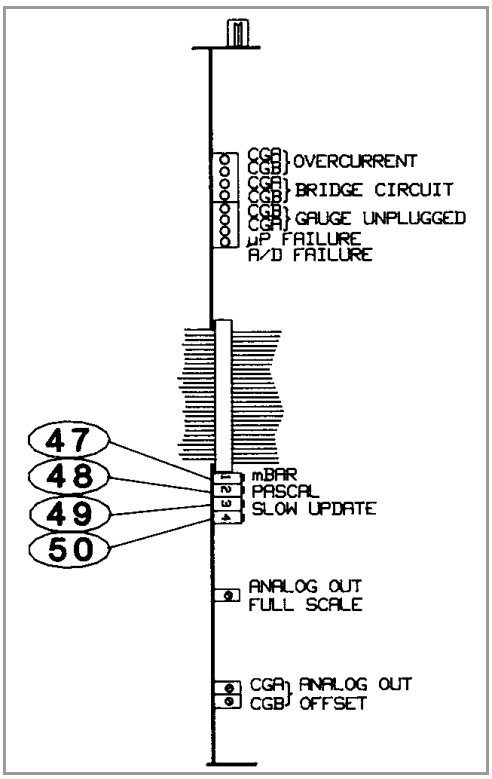

Figure 3-1 *Convectron Module, Top View.*

(49) — **Display Update Rate Switch**

When "ON", this switch enables pressure averaging. The display will be updated approximately every 3 seconds. When "OFF", the update period is approximately 0.5 sec.

(50) — Not used.

3.3.2 Convectron Gauge Tube Installation

3.3.2.1 Important Precautions for Gauge Tube Installation

The following precautions in the use and installation of the Convectron gauge tube must be observed.

WARNING - When high voltage is present, all exposed conductors of a vacuum must be maintained at earth ground.

Under certain conditions, dangerous high voltage can be coupled directly to an ungrounded conductor through a gas almost as effectively as through a copper wire connection. This hazard, which is not peculiar to this product, is a consequence of the ability of an electric current to flow through a gas under certain circumstances. A person may be seriously injured, or even killed by merely touching an exposed ungrounded conductor at high potential.

When high voltages are used within the vacuum system and the Convectron Gauge envelope is not reliably grounded through its vacuum connection, either a separate ground wire must be added, or the envelope must be shielded to positively prevent human contact. The gauge envelope may be grounded by using a metal hose clamp on the gauge connected by a #12 AWG copper wire to the grounded vacuum chamber.

High voltage can couple through a gas to the internal electrodes of a gauge. Do not touch the exposed pins on any gauge installed on a vacuum system where high voltage is present.

1. Observe the precautions at the front of this chapter regarding tube mounting position and high pressure operation.
2. The gauge tube should be installed with the port oriented vertically downward to ensure that no system condensates or other liquids collect in the gauge tube.
3. Keep the tube clean. Do not remove the mounting port cover until you are ready to install the tube.
4. **Do not** mount the gauge tube in a manner such that deposition of process vapors upon the internal surfaces of the tube may occur through line-of-sight access to the interior of the gauge tube.
5. **Do not** install the tube where high amplitudes of vibration are present. Excessive vibration will cause forced convection at high pressure giving erroneous readings.
6. **Do not** bake the tube to temperatures above 150 °C.
7. **Do not** install the gauge tubes where they will be exposed to corrosive gases such as mercury vapor, chlorine, or fluorine, which will attack the gold plated sensor.
8. For greatest accuracy and repeatability the gauge tube should be located in a stable room temperature environment.

3.3.3 Gauge Tube Orientation

It is important to consider the orientation of the gauge tube if accurate readings above 1 Torr are desired.

Below 1 Torr: The gauge tube will operate and accurately read pressures below 1 Torr when mounted in any orientation.

Above 1 Torr: The gauge tube will accurately read pressures above 1 Torr only when mounted with its axis horizontal, preferably with the port pointing vertically downward, as shown in Figure 3-2. It is valuable to point the port downward to facilitate the removal of condensation and other contaminants.

Furthermore, the gauge is factory calibrated with the port pointing vertically downward. Installation of the gauge with the port in other orientations may affect the accuracy of the indicated pressure.

Mounting clearance dimensions are shown in Figure 3-2.

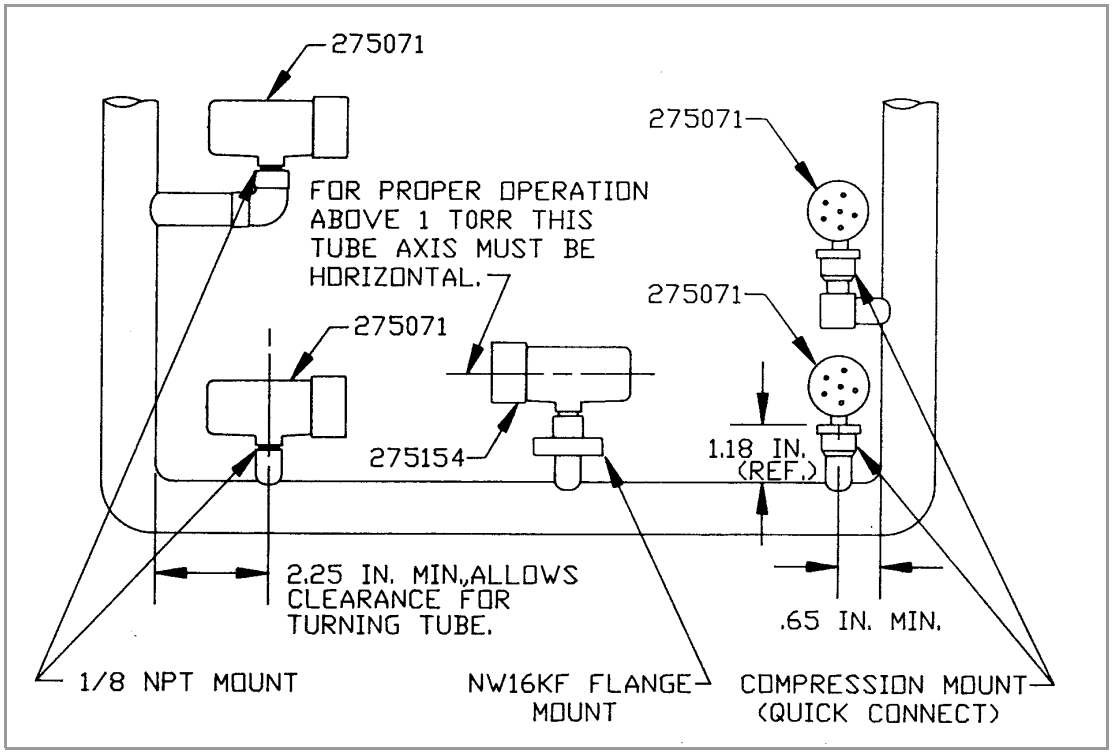

Figure 3-2 *Convectron Gauge Mounting.*

3.3.3.1 Compression Mount (Quick Connect)

Do not use for positive pressure applications.

The gauge tube port is designed to fit a standard 1/2 in. compression (quick connect) mount such as the Cajon Co. Ultra-Torr® fittings.

Remove the caplug from the gauge tube port, insert the gauge tube port into the compression fitting and finger tighten the press ring. If a seal is not achieved it may be due to extreme cleanliness of the O-ring. A light film of vacuum grease such as Apiezon[1] will insure sealing and is normally preferable to the use of pliers or pipe wrench to further tighten the press ring. You may point the electrical pins of the gauge tube anywhere you wish in a 360 degree horizontal circle for optimum routing of the gauge tube cable.

3.3.3.2 1/8 NPT Mount

The threads on the gauge tube port will fit a standard 1/8 NPT female fitting. Wrap the threads of the gauge tube port with Teflon® tape and screw these threads into the system fitting hand tight. Do not use any wrench or tool. The gauge tube body functions adequately as its own wrench. Tighten only sufficiently to achieve a seal. When the threads have been tightened to the point where a seal is just achieved, about one-half turn additional tightening is all that can be gained without overstressing the tube port. Be very careful in tightening so as not to damage the feedthrough pins projecting from the blue trim cover.

3.3.3.3 NW16KF Flange Mount

The KF mounting system requires an O-ring and centering ring to be placed between the mating flanges. The flanges are then held together with the aluminum flange clamp by tightening the wing nut. Maximum pressure for this style mounting system is 1000 Torr absolute.

3.4 Convectron Operation

3.4.1 Reading Pressure

WARNING - IF USED WITHOUT PROPER CALIBRATION OR WITHOUT REFERENCE TO PROPER CALIBRATION TABLES, Convectron gauges can supply misleading pressure indications. This may result in dangerous overpressure conditions within the system. As supplied from the factory, the controller is designed to read pressure for nitrogen. For use with any other gases, consult the gas type correction charts found later in this manual.

The Convectron pressures are read in displays A and B of the 307 control unit. These pressures are displayed to 2 digits, except in the 10^{-4} Torr range, where only 1 meaningful digit is displayed.

3.4.2 Special Considerations for Use Below 10^{-3} Torr

During a fast pumpdown from atmosphere, thermal effects will prevent the Convectron from tracking pressure rapidly below 10^{-3} Torr. After about 15 minutes readings in the 10^{-4} range will be valid and response will be rapid. Calibration at vacuum may be performed at this time, or sooner if readings in the 10^{-4} range are not needed.

The 10^{-4} Torr range is accurate to about 0.1 milliTorr provided the instrument has been carefully zeroed at vacuum. See Section 3.5 Convectron Calibration and Maintenance on page 60 for vacuum and atmosphere calibration procedures. For accurate use in the 10^{-4} Torr range, zeroing should be repeated frequently.

Pressure readings in the 10^{-4} Torr range may differ from those found from ion gauges, since ion gauges usually lose sensitivity near their upper pressure limits.

1. Trademark of James G. Biddle Co.

3.4.3 Use With Gases Other Than N_2 and Air

Before using the Convectron gauge to measure the pressure of other gases make certain the ATM adjustment is correctly set for air. See Section 3.5 Convectron Calibration and Maintenance on page 60.

It is important to understand that the indicated pressure on a Convectron gauge depends on the type of gas in the tube, and on the orientation of the tube axis as well as on the gas pressure in the tube. Convectron gauges are supplied calibrated for N_2 within the accuracy of the instrument. With certain safety precautions, the Convectron gauge may be used to measure pressure of other gases.

Convectron gauge tubes are thermal conductivity gauges of the Pirani type. These gauges transduce gas pressure by measuring the heat loss from a heated sensor wire maintained at constant temperature. For gases other than N_2 and air the heat loss is different at any given true pressure and thus the indicated reading will be different.

3.4.4 Indicated vs. True Pressure Curves

Figures 3-3 through 3-8 show the true pressure vs indicated pressure on Series 275 instruments for eleven commonly used gases. Table 3-1 will help to locate the proper graph for a specific application.

Table 3-1 *Pressure vs. Indicated N_2 Pressure Curve.*

Fig. No.	Range and Units	Gases
3-3	1 to 100 mTorr	All
3-4	0.1 to 1000 Torr	Ar, $C0_2$, CH_4, Freon 12, He
3-5	0.1 to 1000 Torr	D_2, Freon 22, Kr, Ne, 0_2
3-6	10^{-3} to 10^{-1} mbar	All
3-7	0.1 to 1000 mbar	Ar, $C0_2$, CH_4, Freon 12, He
3-8	0.1 to 1000 mbar	D_2, Freon 22, Kr, Ne, 0_2

Note that 1 mbar = 100 Pa, so the mbar charts may be used for pascal units by multiplying the values on the axes by 100.

A useful interpretation of these curves is, for example, that at a true pressure of 2×10^{-2} Torr of CH_4 the heat loss from the sensor is the same as at a pressure of 3×10^{-2} Torr of N_2 (see Figure 3-3 on page 53). The curves at higher pressure vary widely from gas to gas because the thermal losses at higher pressures are greatly different for different gases.

The Convectron gauge tube utilizes convection cooling to provide resolution superior to any other thermal conductivity gauge near atmospheric pressure of N_2 and air. Because convection effects are geometry dependent, the true pressure vs indicated pressure curves for the Convectron gauge tube are likely to be much different from curves for heat loss tubes made by others. Therefore, it is not

safe to attempt to use calibration curves supplied by other manufacturers for their gauges with the Convectron nor is it safe to use curves for the Convectron gauge with gauges supplied by other manufacturers.

If you must measure the pressure of gases other than N_2 or air, use Figures 3-3 through 3-8 to determine the maximum safe indicated pressure for the other gas as explained below.

Example 1 – *Maximum safe indicated pressure.*

Assume a certain system will withstand an internal pressure of 2000 Torr or 38.7 psia. For safety you wish to limit the maximum internal pressure to 760 Torr during backfilling. Assume you wish to measure the pressure of argon. On Figure 3-4 on page 54 locate 760 Torr on the left hand scale, travel to the right to the intersection with the argon (Ar) curve and then down to an indicated pressure of 24 Torr (N_2 equivalent). Thus in this hypothetical situation the maximum safe indicated pressure for argon is 24 Torr.

For safety, it is prudent to place a warning label on the instrument face which under the assumed conditions would read "DO NOT EXCEED 24 TORR FOR ARGON."

Example 2 – *Indicated to true pressure conversion.*

Assume you wish to determine the true pressure of argon in a system when the Convectron is indicating 10 Torr. On Figure 3-4 on page 54, read up from 10 Torr (N_2 equivalent) indicated pressure to the argon curve and then horizontally to the left to a true pressure of 250 Torr. Thus 250 Torr argon pressure produces an indication of 10 Torr (N_2 equivalent).

Example 3 – *True to indicated pressure conversion.*

Assume you wish to set a process control set point at a true pressure of 20 Torr of CO_2. On Figure 3-4 on page 54, locate 20 Torr on the true pressure scale, travel horizontally to the right to the CO_2 curve and then down to an indicated pressure of 6 Torr (N_2 equivalent). Thus the correct process control setting for 20 Torr of $C0_2$ is 6 Torr (N_2 equivalent).

Example 4 – *True to indicated pressure conversion.*

Assume you wish to obtain a helium pressure of 100 Torr in the system. On Figure 3-4 on page 54, locate 100 Torr on the left hand scale, travel horizontally to the right to attempt to intersect the He curve. Because the intersection is off scale it is apparent that this true pressure measurement requirement for helium exceeds the capability of the instrument.

For gases other than those listed, the user must provide accurate conversion data for safe operation. The Convectron gauge is not intended for use above 1000 Torr true pressure.

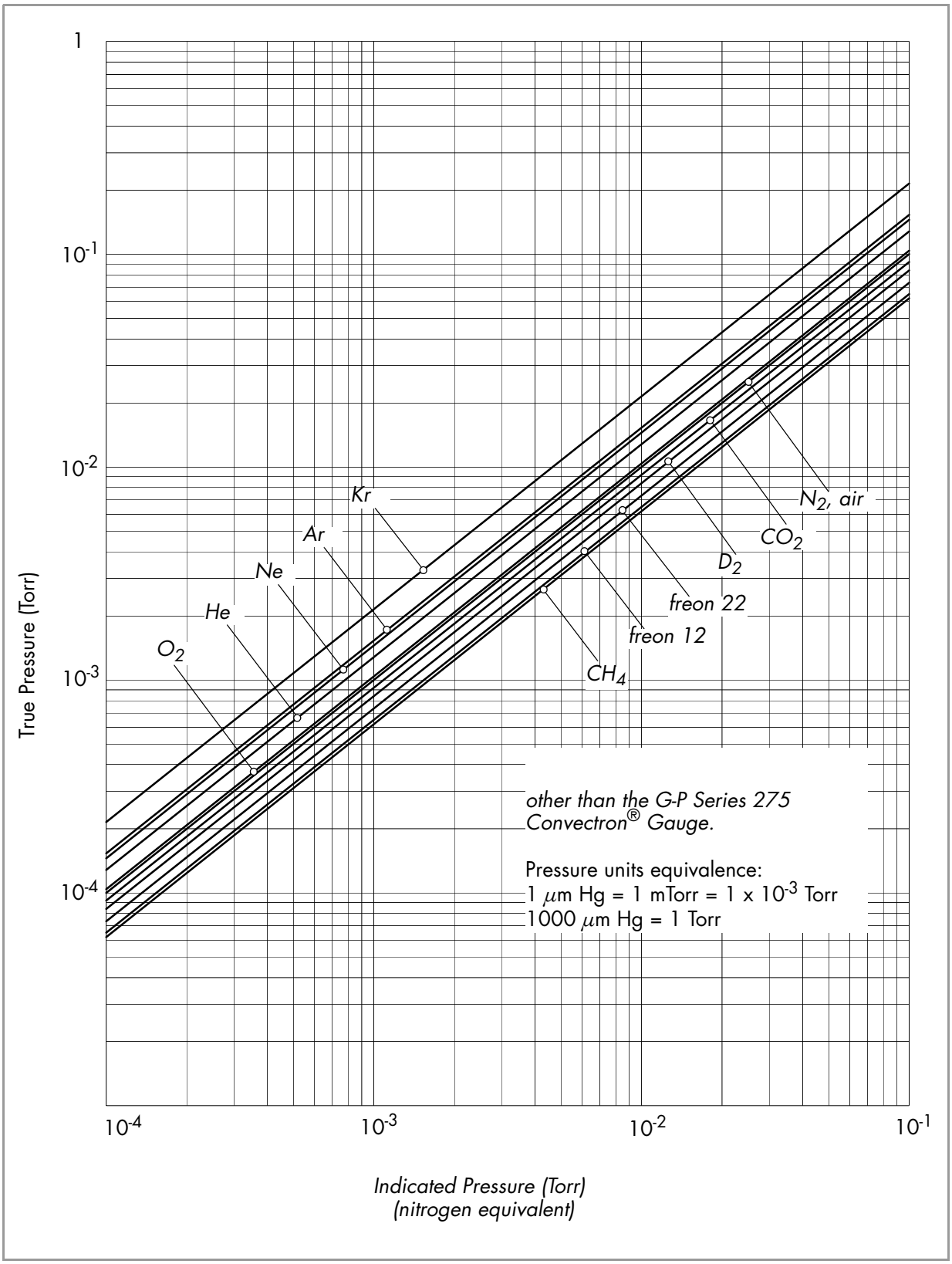

Figure 3-3 *Convectron Gauge Indicated vs. True Pressure Curve; 10^{-4} to 10^{-1} Torr.*

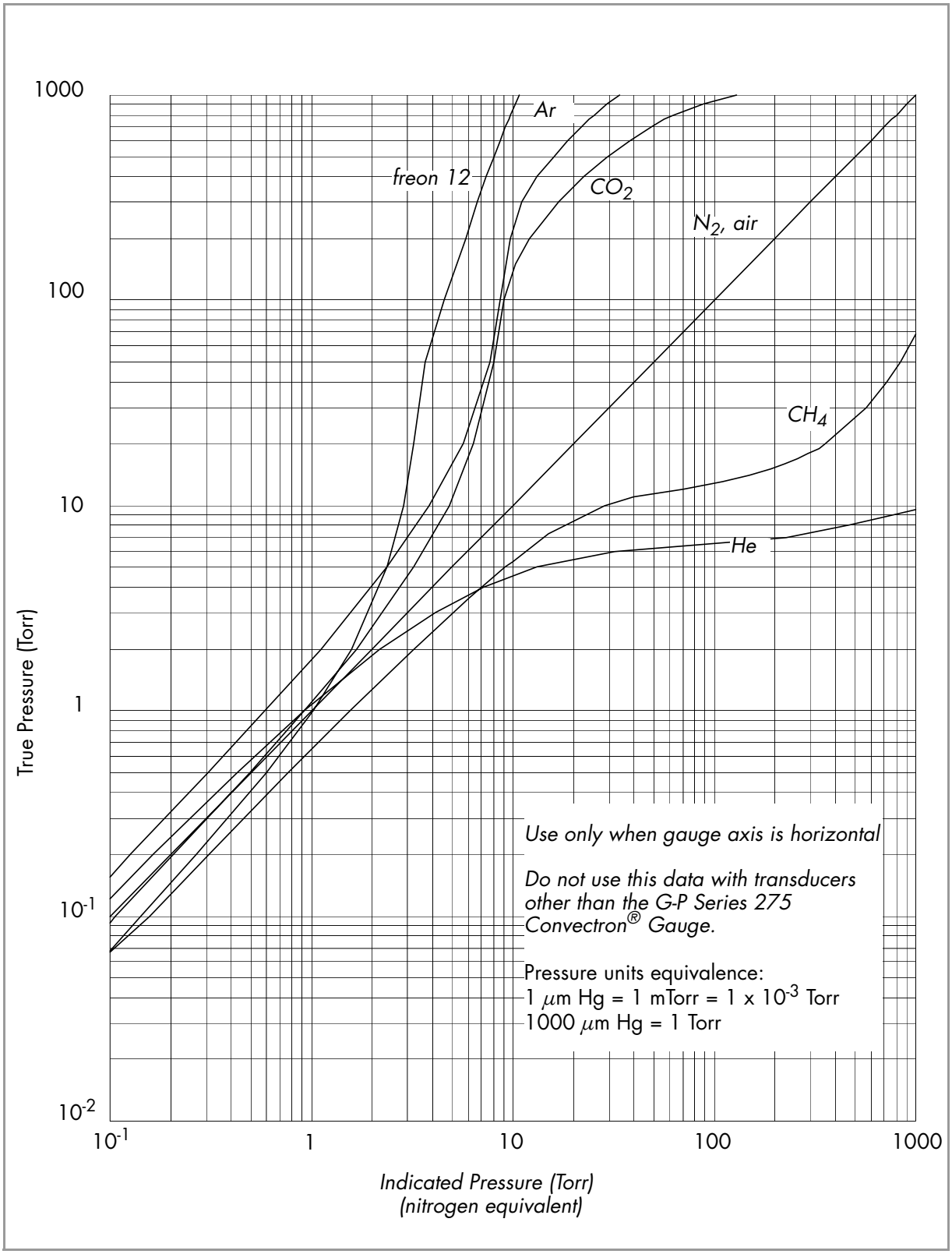

Figure 3-4 *Convectron Gauge Indicated vs. True Pressure Curve; 10^{-1} to 1000 Torr.*

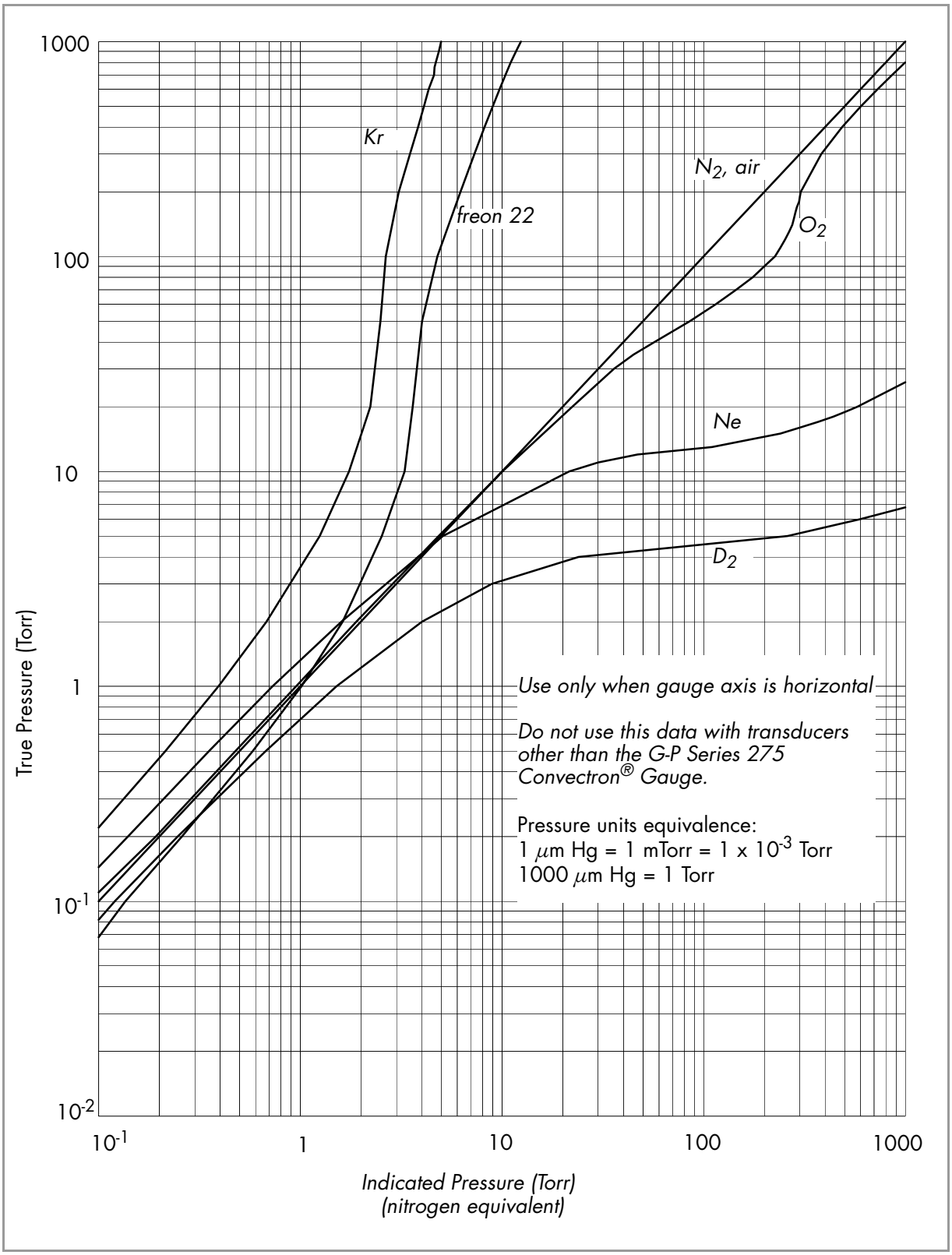

Figure 3-5 *Convectron Gauge Indicated vs. True Pressure Curve; 10^{-1} to 1000 Torr.*

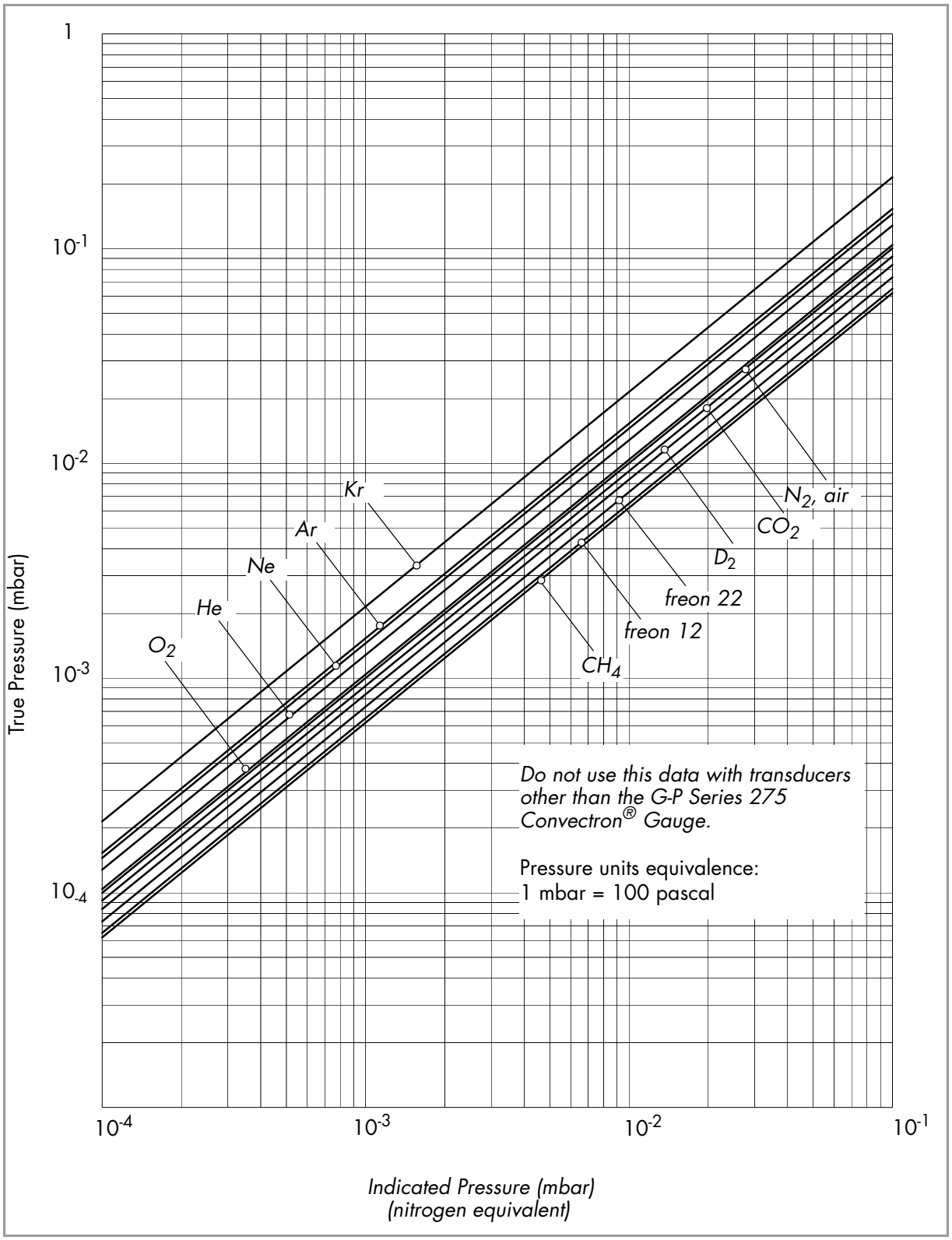

Figure 3-6 *Convectron Gauge Indicated vs. True Pressure Curve; 10^{-4} to 10^{-1} mbar.*

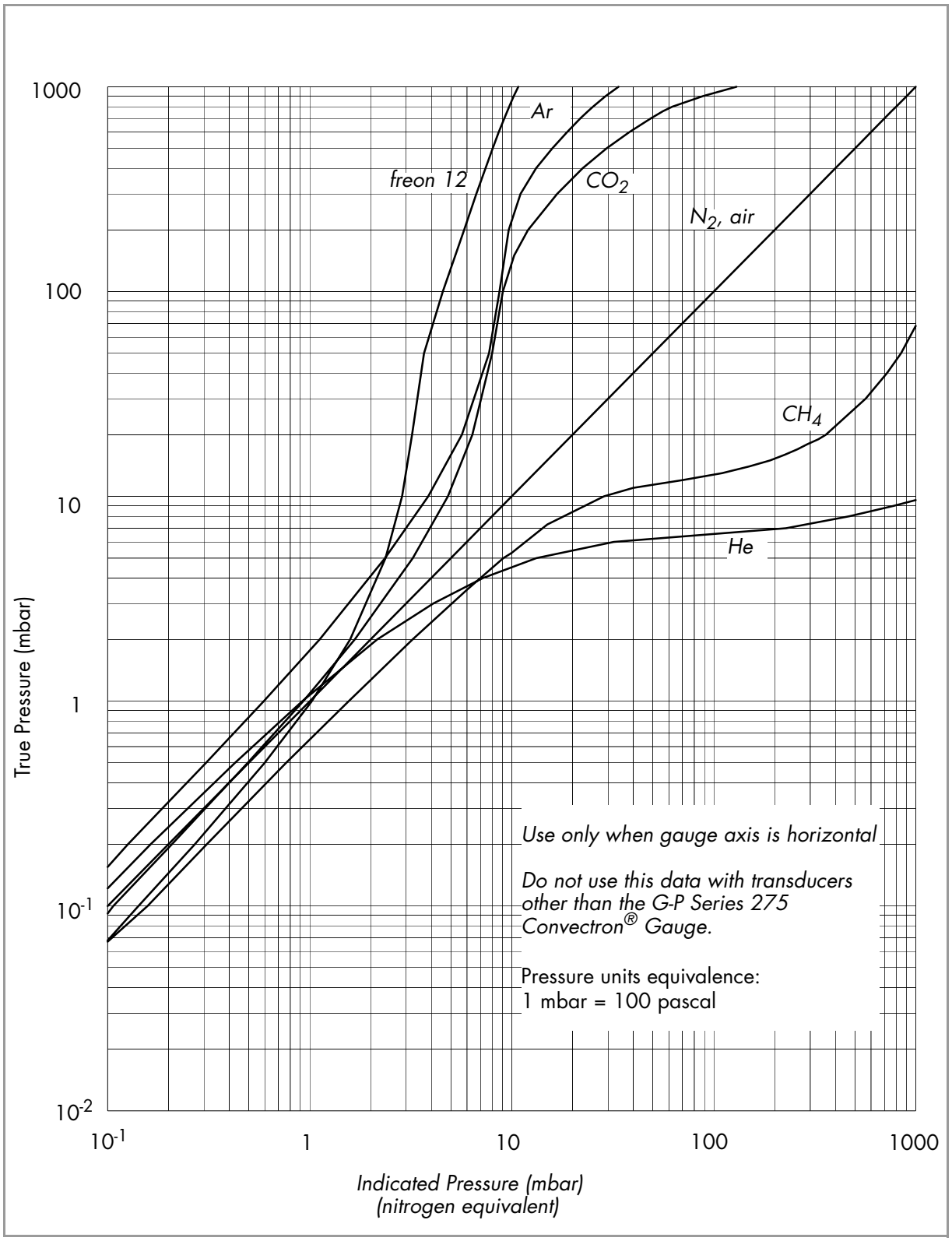

Figure 3-7 *Convectron Gauge Indicated vs. True Pressure Curve; 10^{-1} to 1000 mbar.*

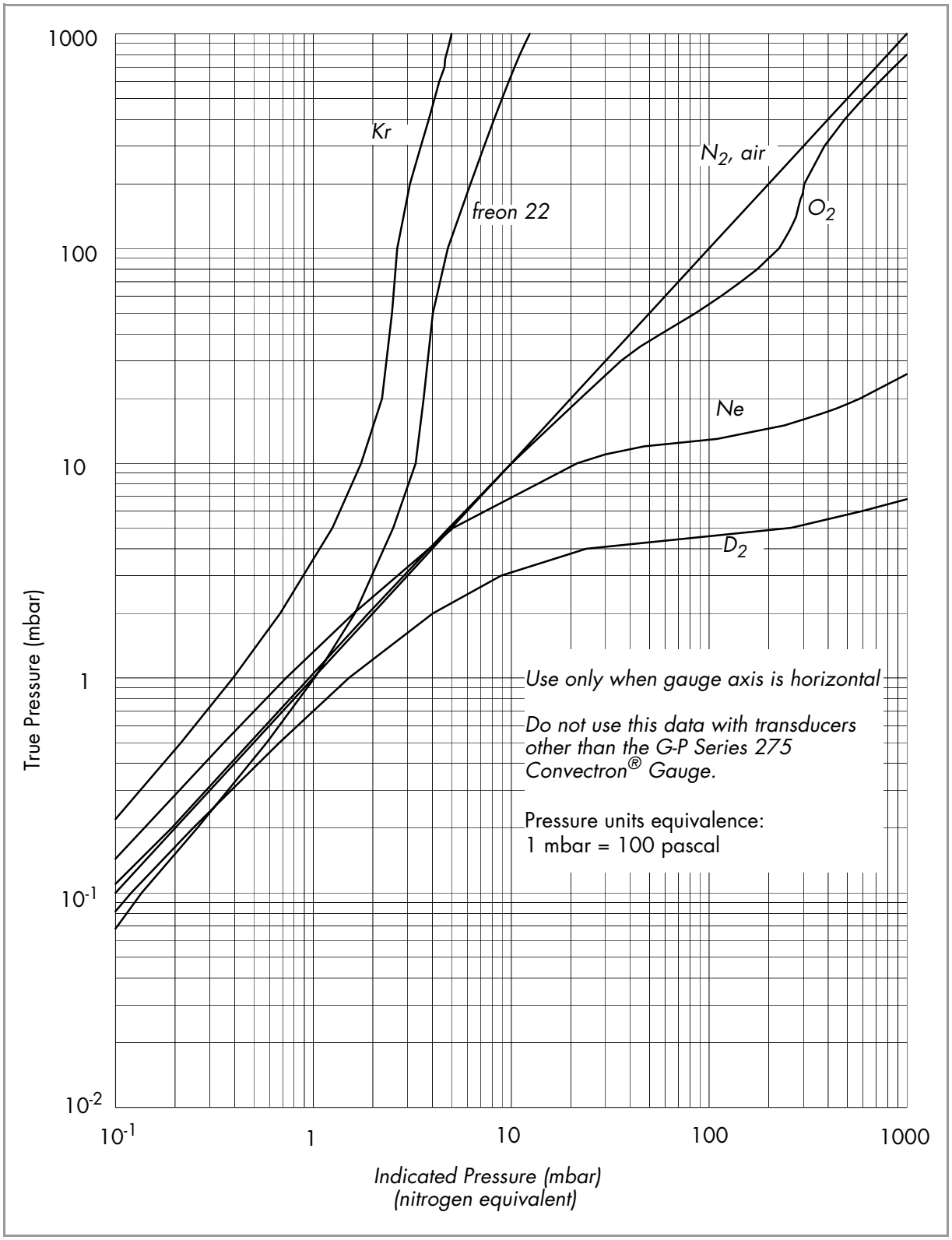

Figure 3-8 *Convectron Gauge Indicated vs. True Pressure Curve; 10^{-1} to 1000 mbar.*

3.4.5 Analog Output

On the rear panel are provided analog outputs for both gauges, see Refs. (51) and (52). These are dc voltages proportional to the logarithm of the pressure, scaled to 1 volt per decade: 0 volts = 1 x 10^{-4} or less, Torr or mbar, 1 volt = 1 x 10^{-3}, etc.

For pascal units, the analog output will be scaled to 0 volts = 1 x 10^{-2} Pa.

Internal offset adjustments are provided which allow a shift in the analog output at 10^{-4} Torr away from 0 volts to anywhere in the range -7 to +1 Vdc. This adjustment does not affect the slope of the analog output vs pressure curve. See Section 3.5 on page 60 for adjustment.

Standard 1/8″ miniature phono jack connectors are provided for the analog output.

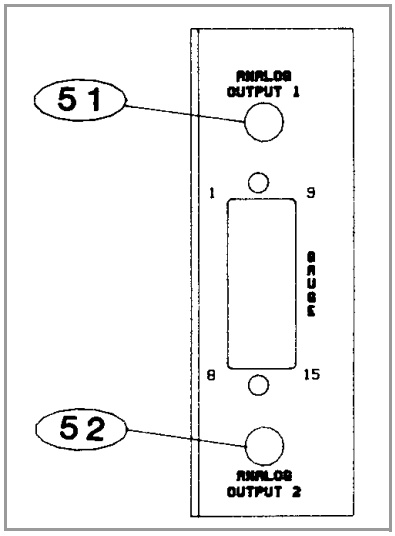

Figure 3-9 *Convectron Module Rear panel.*

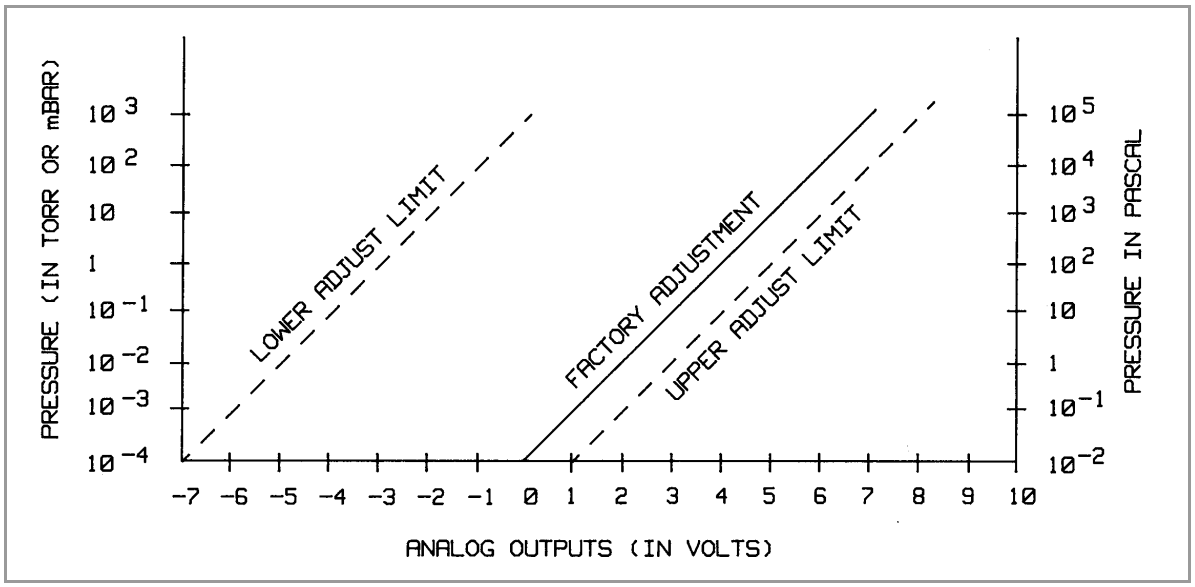

Figure 3-10 *Convectron Gauge Pressure Analog Output.*

55 and 58 — **Filament Auto Turn-On**

CGA may be used to automatically turn on IG1, and CGB to turn on IG2. Auto turn-on occurs when the CG pressure drops below the setpoint defined by the auto turn-on adjustment potentiometers. The IG will also automatically be turned off when the pressure rises above this point.

The automatic off/on function will execute only once per setpoint crossing. For example, the IG may be turned off manually when below the setpoint, and the auto-on function will not turn it back on again until CG pressure has risen above the setpoint and once again dropped below.

The auto turn-on potentiometer is marked with rough pressure calibration markings. To set the pressure at which the IG will turn on with falling CG pressure, and off with rising pressure, simply adjust the pot to point to the desired pressure.

More precise control may be achieved by fixing the system pressure at the desired auto turn-on pressure, and adjusting the potentiometer slowly until the gauge comes on.

To disable the auto turn on function, adjust the CG auto turn-on pot 55 or 58 completely counter-clockwise ("off").

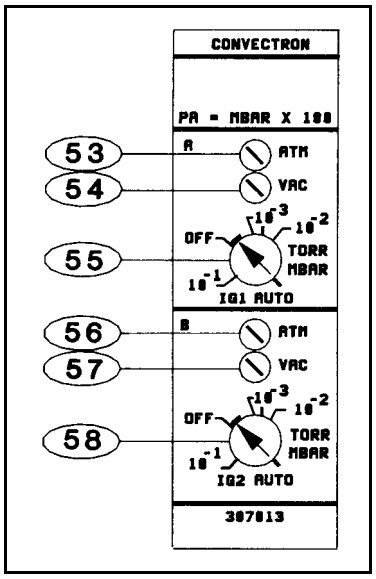

Figure 3-11 *Convectron Module Front Panel.*

3.5 Convectron Calibration and Maintenance

Each gauge tube is individually calibrated for N_2 and air prior to leaving the factory. The Convectron gauge tube itself has a temperature compensated design. Each controller is also individually calibrated to provide accurate readout of N_2 and air pressure with any calibrated tube. Therefore, initial calibration should not be necessary. See Table 3-1 on page 51 for use with gases other than N_2 or air.

Calibration should be performed if accurate readings in the 10^{-4} Torr range are desired, if the tube becomes contaminated, does not read correctly, or to readjust for use with long cables. For accurate calibration, the vacuum and atmosphere adjustments must be made in the following order. The gauge and controller can be calibrated as a system by performing the following steps:

1. 54 and 57 — **Zero Adjustment**

- **a.** Evacuate the system to a pressure less than 1×10^{-4} Torr.
- **b.** With the gauge tube operating, adjust the VAC pot until 0.0 0 shows in the display. Note that if the adjustment is turned too far below zero, a minus sign will appear before the exponent (0.0 -0). Thus proper zero calibration is achieved when only 0.0 0 appears.

2. 53 and 56 — **Atmosphere Adjustment**

- **a.** Allow the system pressure to rise to atmospheric pressure of N_2 or air.

b. Adjust the ATM pot until the pressure displayed agrees with the absolute pressure as read on an accurate barometer. Use absolute pressure, not corrected to sea level.

NOTE: 1 atmosphere normal at sea level = 7.6 x 10^{2} Torr = 1.0 x 10^{3} mbar = 1.0 x 10^{5} Pa.

59 — Analog Output Full Scale Adjustment

This potentiometer may be adjusted to calibrate the span of the analog output voltage to the factory setting of 1 volt per decade. This adjustment is common to both outputs.

60 and 61 — Analog Output Offset; gauges A and B

These potentiometers provide adjustable offset voltages to each analog output. The range of this adjustment allows setting the analog output at vacuum (P = 1 x 10^{-4} Torr) anywhere in the range -7 to +1 Vdc.

The factory calibration is established by adjusting 60 and 61 to yield 0-volt outputs when both gauges are at vacuum (pressure less than 1 x 10^{-4} Torr), then adjusting 59 to increase 1 volt for each decade the pressure increases.

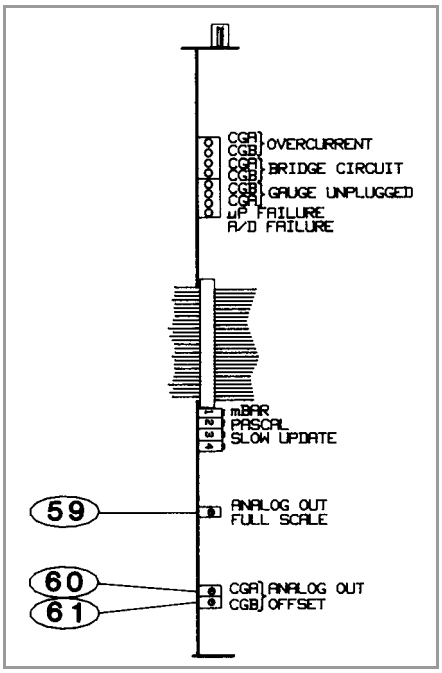

Figure 3-12 *Convectron Module Top View.*

3.5.1 Cleaning the Gauge Tube

The Convectron gauge may be baked to 150 °C. See Section 3.6 on page 62 for a list of materials exposed to vacuum.

When the fine sensor wire is so contaminated with oil or other films that its emissivity or its diameter is appreciably altered, a change of calibration will result. Cleaning with trichloroethylene, perchloroethylene, toluene, or acetone is possible but it must be done very carefully so as not to damage the sensor.

CAUTION: The fumes from any of these solvents can be dangerous to your health if inhaled and they should be used in well ventilated areas exhausted to the outdoors. Acetone and toluene are highly flammable and should be used away from open flame or electrical equipment.

Hold the tube with the main body horizontal and the port projecting upward at an angle of 45 degrees and slowly fill it with solvent using a standard wash bottle with the spout inserted in the port to where it touches the screen. Let the solvent stand in the tube for at least ten minutes. Do not shake the tube if the tube is only partially filled as liquid forces on the sensor can become large enough to affect the transducer calibration. If the tube is completely filled, shaking is not helpful. To drain the tube, position it horizontally with the port facing downward. By slightly warming the tube,

a positive pressure will build up internally forcing the solvent out past the screen. Then allow tube to dry overnight with port vertically downward and uncapped. Be certain no solvent odor remains before reinstalling tube on system.

3.6 Theory of Operation

The Convectron transducer is represented in Figure 3-13 as R1, R2, R3, and R4. These four resistances form the legs of a bridge circuit, with R1 designating the sensor wire of the transducer. R2 is a resistive network in the tube which compensates for changes in the ambient temperature. At bridge null, R1=R2xR3/R4. If there are no changes in ambient temperature, the value of R1 is a constant and the bridge is balanced.

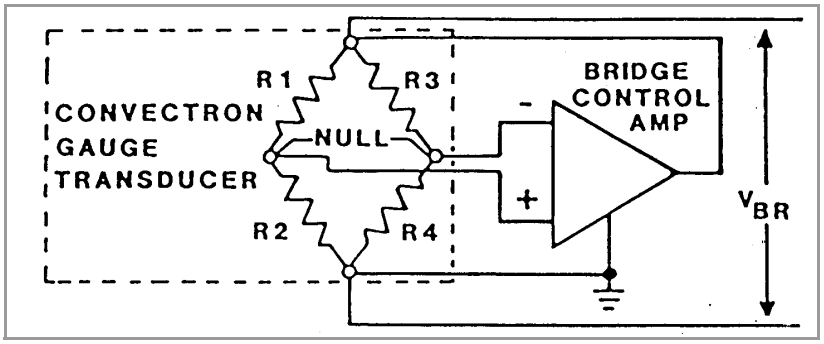

Figure 3-13 *Simplified Schematic Convectron Gauge Module.*

As the vacuum system pressure is decreased, there are fewer molecules in the system to conduct the heat away from the sensor wire causing the temperature and resistance of R1 to increase. The increased resistance of R1 causes the bridge to unbalance and a voltage is developed across the null terminals. The bridge control circuit senses the null voltage and decreases the voltage across the bridge until the null voltage is again zero. When the bridge voltage is decreased, the power dissipated in the sensor wire is decreased causing the resistance of R1 to decrease to its previous value. The opposite events happen for a pressure increase. The bridge voltage is a non-linear function of pressure.

All materials have been chosen for ultra high vacuum service, corrosion resistance and bakeability to 150 °C. The gauge tube envelope is type 304 stainless steel. All metallic joints in the envelope are TIG welded. No solder is used within the envelope. The following materials are exposed to the vacuum: Type 304 stainless steel, Carpenter Alloy 52, Kovar[1], Kapton gold plated tungsten, and borosilicate glass and Dow-Corning 9015 glass. The blue trim cover is molded of polysulfone thermoplastic suitable for service to 150 °C.

1. Trademark of Carpenter Technology

3.7 Convectron Troubleshooting

3.7.1 Transducer Test Procedure

Do not perform electrical continuity tests with instruments applying in excess of 1 volt when the tube is at vacuum, or 5 volts when at atmospheric pressure.

The 275 transducer should show the following resistances (pin numbers are embossed on the transducer cap):

Pins 1 to 2	20 to 25 ohms
Pins 2 to 3	50 to 60 ohms
Pins 1 to 5	175 to 190 ohms
Any pin to envelope	open circuit

If the resistance from pin 1 to 2 is about 800 ohms, the sensor wire is broken.

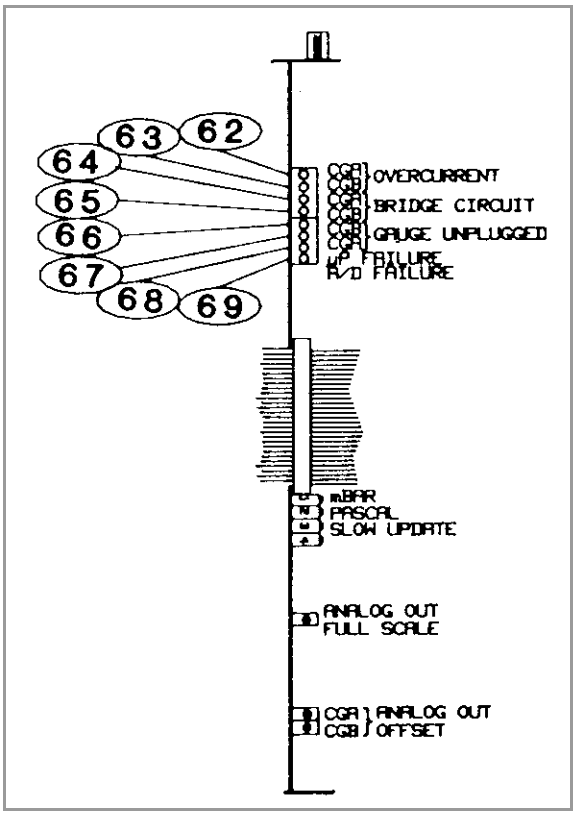

Figure 3-14 *Convectron Module, Top view.*

Table 3-2 *Convectron Troubleshooting Guide.*

Symptom	Possible Cause
CGA overcurrent indicator (62) lit.	Cable short, pins 1-3.
CGB overcurrent indicator (63) lit.	Cable short, pins 1-3.
Indicators (64) or (65) lit.	Circuit failure.
Indicator (66) lit.	CGB unplugged; broken sensor wire.
Indicator (67) lit.	CGA unplugged; broken sensor wire.
Microprocessor reset LED (68) lit or flashing.	Microprocessor failure.
A/D integration failure indicator (69) lit or flashing.	Circuit failure.
Display reads 9.9 +9.	Broken sensor wire.
Display reads -	Tube or cable at controller unplugged.
Pressure reading very inaccurate.	Controller out of calibration, unknown gas type, tube mounted in the wrong orientation, sensor damaged (e.g., by reactive gas), tube very dirty, extremes of temperature or mechanical vibration.

3.8 Convectron Specifications

Gauge Type	G-P Series 275
Pressure Range	1 x 10^{-4} Torr to 990 Torr, N_2 equivalent.
Display Resolution	2 significant digits, except for 1 significant digit in 10^{-4} Torr decade.
Gas Type	N_2, Air
Display Update Time	0.5 sec typical. Switch selectable to 3 sec/reading, averaged.
Analog Output	Logarithmic, 1V/decade, Factory set to 0-7 Vdc. Adjustable offset +1 Vdc to -7 Vdc. 10 mA maximum current.

4.1 Introduction

The Thermocouple Gauge (TC) Module for the Granville-Phillips 307 Vacuum Gauge Controller provides pressure measurement from 1 X 10^{-3} Torr (1.3 X 10^{-3} mbar or 1.33 x 10^{-1} Pascal) to 1 Torr. Two transducers are displayed simultaneously in the second and third display lines, and are denoted here by "TCA" and "TCB" respectively.

Analog output is also provided. The thermocouple gauge can also be used to automatically turn on or off an ion gauge. When used with the process control, the two gauges control four setpoints, in addition to the ion gauge turn-on setpoints.

4.2 Thermocouple Gauge Module Installation

4.2.1 Units of Measure

Your instrument will have been shipped from the factory pre-set to display the units of measure; Torr, millibar or Pascal, that you requested. If you wish to change units, proceed as follows:

1. Shut off power to the control unit.
2. Remove the top cover. Locate the thermocouple gauge pc board
3. Locate 70, the millibar, and 71, the Pascal, units switches.
4. Leave both switches open for Torr units. Close the appropriate switch for either millibar or Pascal units.
5. Modify the units of measure of the electrometer to be consistent with the thermocouple gauge module.
6. Slip the label card out of the top of the front panel and apply the appropriate pressure units label.

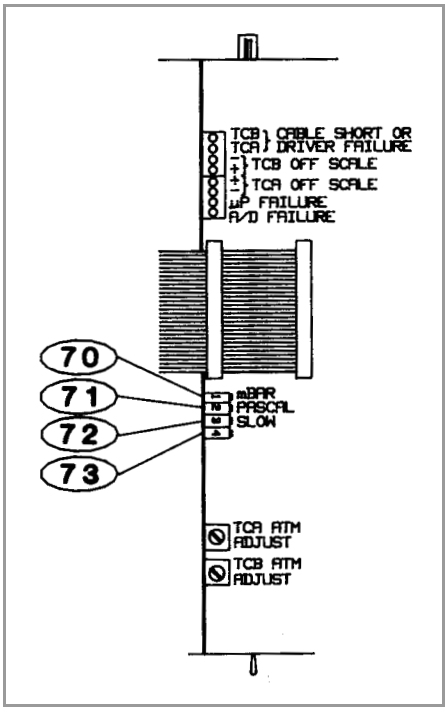

Figure 4-1 *Thermocouple Module, Top View.*

72 — **Display Update Rate Switch**

When "ON", this switch enables pressure averaging. The display will be updated approximately every 3 seconds.

73 — Not used.

4.2.2 Thermocouple Gauge Tube Installation

The 307 VGC thermocouple gauge module is designed to operate with Granville-Phillips 270006 or comparable transducers. (See Section 4.6 Thermocouple Gauge Specifications on page 70 for other compatible transducers).

The thermocouple gauge tubes may be installed anywhere in the system using a 1/8 NPT or .410 in. compression connection, or may be welded directly. Do not use compression fittings for positive pressure applications. If installed in an area where condensable vapors are present, mount with the open end pointing down to allow drainage.

4.3 Thermocouple Gauge Operation

4.3.1 Reading Pressure

The thermocouple gauge pressures are read in displays A and B, the second and third display lines, of the 307 control unit. Since thermocouple gauges have negligible resolution at pressures above 1 Torr, the instrument overflows to a pressure of 9.9 +9 at pressures above 1 Torr. If the gauge is reading “above atmosphere” the display will read 99 +9, that is, the decimal point disappears. For the bargraph display, the last 2 elements on the right will blink for the “above atmosphere” condition. This can be used in the atmosphere calibration procedure (see Section 4.4 Thermocouple Gauge Calibration on page 68).

4.3.2 Analog Output

On the rear panel are provided analog outputs for both gauges, 74 and 75. The voltage is 0 to 10 volts dc, non-linear. See Figure 4-2.

Standard 1/8” miniature phono jack connectors are provided for the analog output.

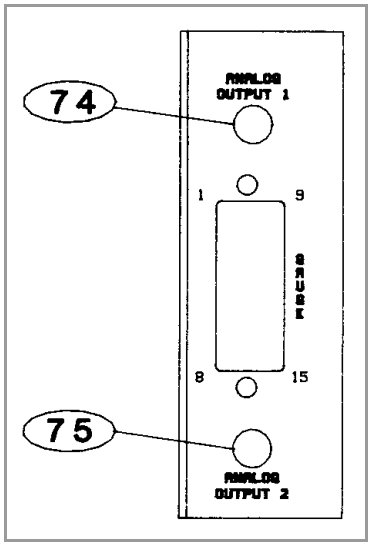

Figure 4-2 *Thermocouple Gauge Module Rear Panel.*

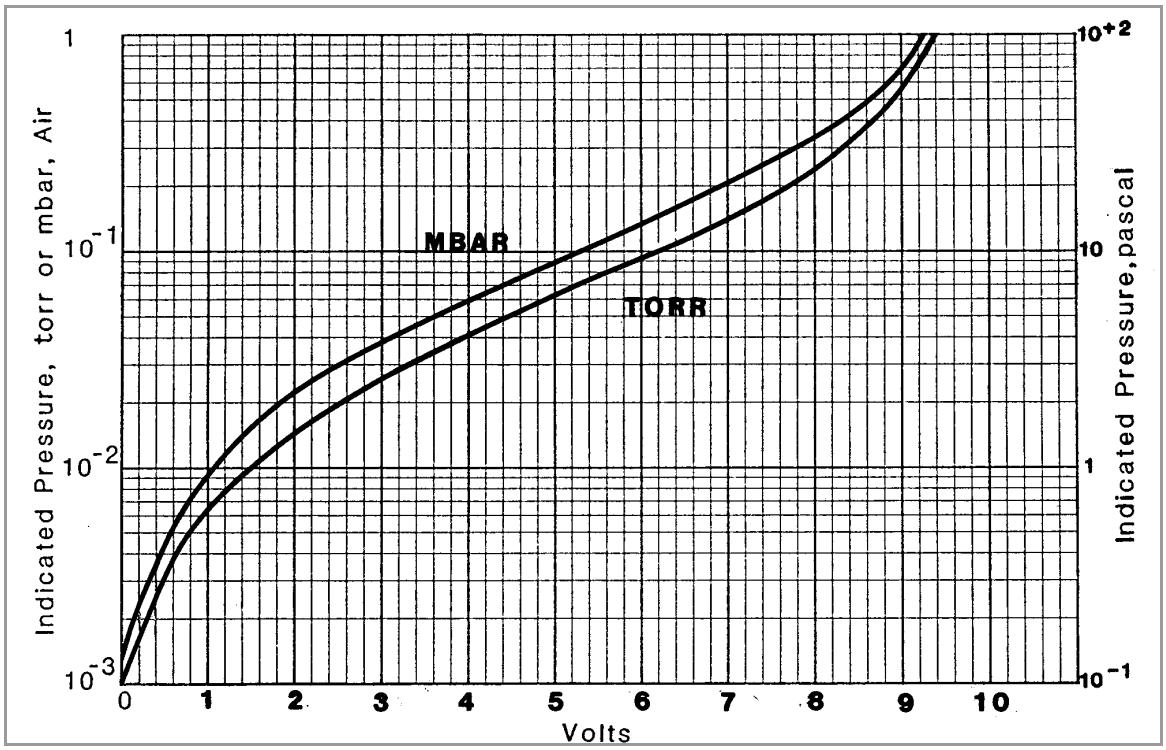

Figure 4-3 *Thermocouple Gauge Pressure Analog Output.*

4.3.3 Filament Auto Turn-On

TCA may be used to automatically turn on IG1, and TCB to turn on IG2. Auto turn on occurs when the TC pressure drops below the setpoint defined by the auto turn-on adjustment potentiometers, (77) and (79). The IG will also automatically be turned off when the pressure rises above this point.

The automatic on/off function will execute only once per setpoint crossing. For example, the IG may be turned off manually when below the setpoint, and the auto-on function will not turn it back on again until TC pressure has risen above the setpoint and once again dropped below.

The auto turn-on pot is marked with rough pressure calibration markings. To set the pressure at which the IG will turn on with falling TC pressure, and off with rising pressure, simply adjust the pot to point to the desired pressure.

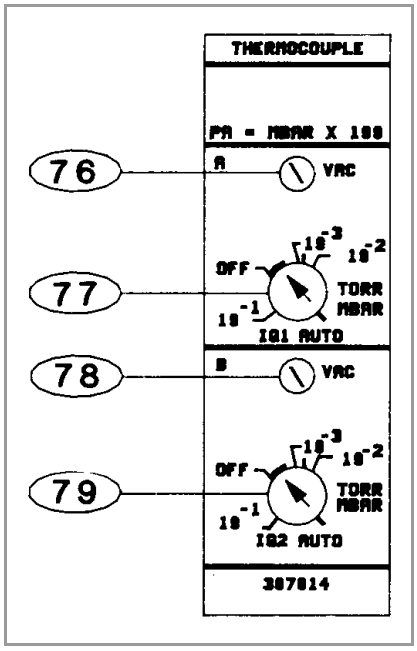

Figure 4-4 *Thermocouple Gauge Module, Front Panel.*

More precise control may be achieved by fixing the system pressure at the desired auto turn-on pressure, and adjusting the potentiometer slowly until the gauge comes on.

To disable the auto turn on function, adjust the auto turn-on pot completely counter-clockwise ("OFF").

4.4 Thermocouple Gauge Calibration

76 and 78 — **Zero Adjustment**

1. Evacuate the system to a pressure less than 1 x 10^{-3} Torr (if bargraph display proceed to Step 2).
2. With the gauge tube operating, adjust the VAC pot until a single "0" shows in the display. Note that if the adjustment is turned too far below zero, a minus sign will appear in the display. Thus proper zero calibration is achieved when only the "0" appears.

88 and 89 — **Atmosphere Adjustment**

Calibration at atmosphere is performed at the factory and should not normally be attempted by the user. However, if necessary, proceed as follows:

1. Allow the system pressure to rise to atmospheric pressure.
2. Remove the top of the control unit.
3. Adjust the atmosphere potentiometer, 88 for TCA or 89 for TCB, until the pressure display is 9.9 x 10+9. Note that when adjusted beyond this point, the decimal point of the display will disappear, "perfect" calibration is achieved when the decimal point just disappears. However, the resolution of the gauge at this point is very poor, and the appearance or disappearance of the decimal point during normal operation when the gauge is at atmosphere is no cause for concern.

4.5 Thermocouple Gauge Troubleshooting

Refer to Figure 4-5 to find the indicator LEDs on the thermocouple printed circuit board.

Table 4-1 *Troubleshooting Guide.*

Symptom	Possible Cause
Indicator LED 80 lit.	Cable short or circuit failure (TCB).
Indicator 81 lit.	Cable short or circuit failure (TCA).
Indicators 82 or 83 lit.	Circuit failure or TCB out of calibration.
Indicators 84 or 85 lit.	Circuit failure or TCA out of calibration.
Indicator 86 lit.	Microprocessor failure.
Indicator 87 lit.	Circuit failure.
Display reads 9.9 +9.	Tube unplugged.
Pressure reading very inaccurate.	Tube out of calibration or contaminated. Controller out of calibration.
Tube reads at or below zero, or above atmosphere at all times.	Controller out of calibration.

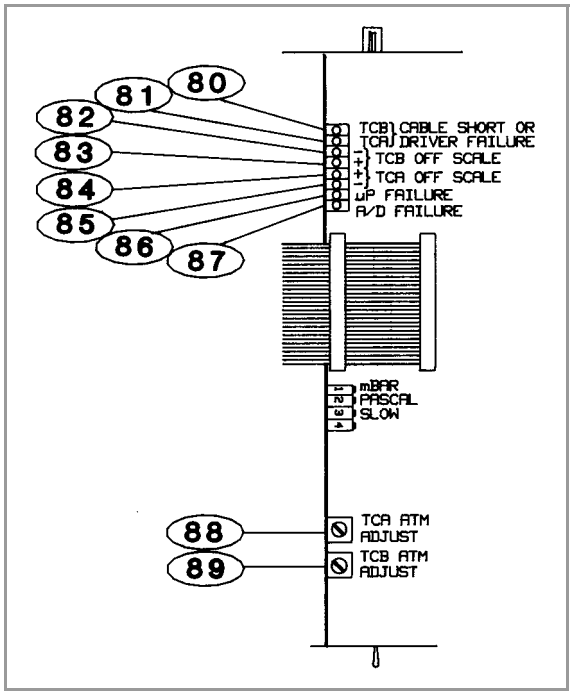

Figure 4-5 *Thermocouple Gauge Module, Top View.*

4.6 Thermocouple Gauge Specifications

Gauge Type	G-P 270006, Comptech TVT-6000, or Teledyne-Hastings DV-6M, DV-6R, DV-36, DV-20, or equivalent.
Pressure Range	10^{-3} Torr to 1 Torr Nitrogen or air equivalent.
Display Resolution	2 significant digits
Gas Type	N_2 or Air.
Display Update Time	0.5 sec typical, switch selectable to 3 sec/reading, averaged.
Analog Output Voltage Maximum Current	 0-10 Vdc nonlinear. 5 mA.

It is the installer's responsibility to ensure that the automatic signals provided by the product are always used in a safe manner. Carefully check the system programming before switching to automatic operation.

Where an equipment malfunction could cause a hazardous situation, always provide for fail-safe operation. As an example, in an automatic backfill operation where a malfunction might cause high internal pressures, provide an appropriate pressure relief device.

5.1 Introduction to the Process Control Module

A Process Control Module provides the 307 Vacuum Gauge Controller with single-pole, double-throw relays that may be controlled either by digital setpoints or by the built-in manual override switches.

The Process Control Module may be purchased with 2 or 6 channels. The first 2 channels are assigned to the ion gauges. If present, channels 3 and 4 are assigned to CGA or TCA; and 5 and 6 to CGB, TCB, or CMB.

Switches are provided to assign channel 1 to IG1, IG2, or both; and likewise for channel 2.

All six channels have selectable polarity for activation above or below the setpoint.

The six-channel process control module can also be purchased with user assignable channels for gauges. This configuration is noted with a “C” in the catalog number (307###-##C-##). See Section 5.4.

5.2 Process Control Module Installation

5.2.1 Process Control System Connections

Prior to connecting the process controls to the system, it is recommended that the following steps be followed. If application assistance is desired, contact a Granville-Phillips application engineer.

a. Unless the control logic is simple and obvious, develop a logic diagram of the process control function.

b. Prepare a specification table which lists the proposed pressure setting, system measurement point, and polarity for each PC channel.

c. Draw a circuit schematic which specifies exactly how each piece of system hardware will be connected to the 307 process control relays.

d. With the Process Control Module connector disconnected, connect the process control cable to the devices to be controlled.

e. Ensure that all devices are under manual control before connecting to the Process Control Module.

f. Attach a copy of the process control circuit diagram to this manual for future reference and troubleshooting.

The process control connector is embossed with letters identifying each pin. The following table shows the letters designating the 3 pins assigned to each of the 6 channels:

PROCESS CONTROL CHANNEL	K1	K2	K3	K4	K5	K6
POLE	W	H	M	C	J	S
N.C.	P	A	U	K	B	X
N.O.	T	D	R	F	E	V
CHASSIS GND - PIN L		NO CONNECTION - PIN N				

Figure 5-1 *Pin Assignments/Connector.*

5.3 Process Control Operation

At all times the status of the 6 relays are displayed in the relay status LEDs on the 307 front panel (90). Note that these LEDs do not indicate whether the gauge pressure is above or below the programmed setpoint, since setpoint polarity and manual override status may result in activation above or below the setpoint.

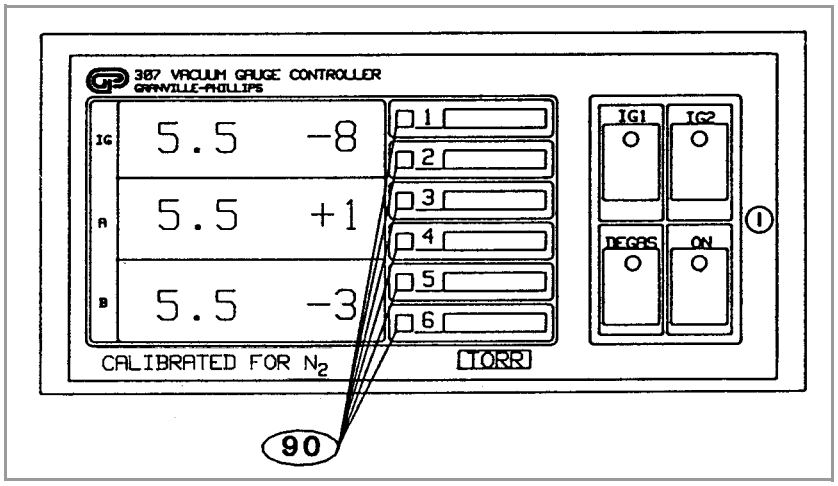

Figure 5-2 *Process Control Relay Status Lights.*

5.3.1 Setpoint Display and Adjustment

Setpoints are stored in non-volatile memory, and are specified by a 1-digit mantissa and 2-digit exponent. They may be set anywhere in the range 1×10^{-12} to $9 \times 10^{+5}$. This allows for the entire pressure range of all supported transducer types and systems of units.

The setpoint is compared directly to the display data, so units of measure are implicit. Changing the units switch on the gauge control modules will not change the stored setpoints. They must be re-programmed in the new system of units.

If a setpoint is set to “above atmosphere” then the relay will always be activated (unless its polarity is reversed, see Section 5.3.3 Relay Polarity Setting on page 74), except during overflow conditions that occur, e.g. when an ion gauge is first powered up, or a Convectron gauge is disconnected. If it is desired that a process control be held in one state, the manual override switch should be used. If the setpoint is adjusted below 1×10^{-12} to 0 then it will always be deactivated (unless polarity is reversed).

To Display a Setpoint

1. Be sure the "CAL" switch of the electrometer is in its center position, or the calibration data in display line 1 will conflict with the display of setpoints 1 and 2.
2. Adjust the thumbwheel (94) to the number of the channel you wish to display.
3. Press either setpoint display/set button, (92) or (93) and release. The setpoint will appear for 2 seconds in the same display line as the associated transducer;

   Setpoints 1 and 2 appear in display 1.

   Setpoints 3 and 4 appear in display 2.

   Setpoints 5 and 6 appear in display 3.

To Modify a Setpoint

1. Adjust the thumbwheel (94) to the number of the channel you wish to modify.
2. Press and hold the setpoint SET button for the direction you wish the setpoint to change, up, (92), to raise the setpoint, down, (93), to lower it.
3. The setpoint will scroll until the button is released. It will scroll slowly until a decade boundary is crossed and then will speed up to facilitate rapid changes across many decades. Release the button when you have entered the desired decade, and then re-depress it to scroll slowly within the decade to reach the exact setpoint needed.

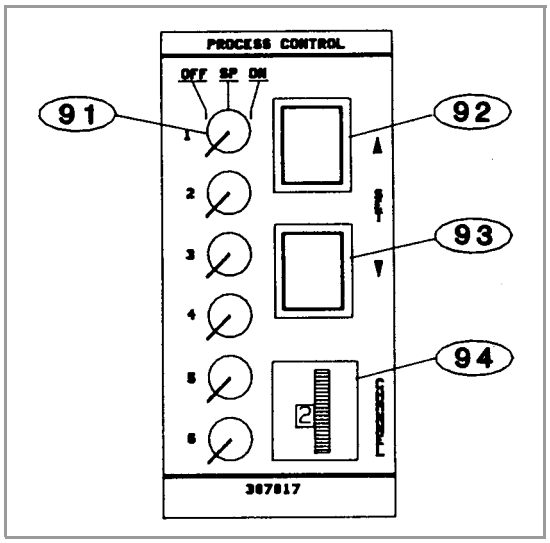

Figure 5-3 *Process Control Module, Front Panel.*

After the setpoint button is released, the display will return to pressure data after two seconds. At this time the new setpoint will be deposited in non-volatile memory.

5.3.2 Points to Consider in Using the Process Control Module

- If the ion gauges are both off, PC relays 1 and 2 will deactivate, regardless of polarity setting.
- If neither the Convectron nor the Thermocouple Gauge Module are present, channels 3-6, if present, will always be *deactivated*.
- No change in status of relays 1 and 2 will occur during degas. They will function as if the pressure was frozen at the instant degas was initiated. This is because large pressure variations may occur in an ion gauge tube under degas.
- There is a programmed 10% hysteresis on each process control setpoint. For example, with a pressure setpoint of 6.3 Torr the relay will activate when the display reaches 6.2 Torr (for falling pressure) and will deactivate when the pressure rises to one significant digit above the setpoint plus 10%, i.e., 6.3 + 0.6 + 0.1 or 7 Torr. For setpoints where the second digit is 0.5 or greater the 10% value is rounded up. For example, if the setpoint is programmed to 6.6 Torr the relay will activate at 6.5 Torr (on falling pressure) and will deactivate when the pressure rises to 6.6 + 0.7 + 0.1 or 7.4 Torr.

- Since the process control and computer interface modules derive their pressure data directly from the display bus, they will be unable to update their pressure data while setpoints are being displayed. They will not mistakenly interpret setpoint data as pressure data, but will simply retain the last displayed pressure data until the SET key is released.
- If the thumbwheel setting is changed while a setpoint is being displayed, this change will not take affect until the display has been released and the SET key depressed another time.

5.3.3 Relay Polarity Setting

The relays can be set to activate with pressure either above or below the setpoint. A switch is provided for each channel. For activation below the setpoint, the switch should be in the OFF position. This is the factory setting. Refer to the numbers on the printed circuit board--not on the switch body itself--for the channel number. Note 96 is the switch for channel 6.

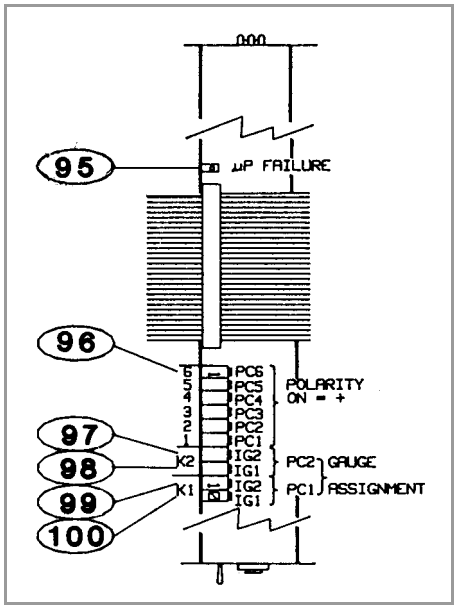

Figure 5-4 *Process Control Module, Top View.*

5.3.4 Ion Gauge Assignment

Process Control channels 1 and 2 are controlled by the ionization gauge. Process Control channel 1 (PC1) operates relay K1 and Process Control channel 2 (PC2) operates relay K2. Ion Gauge 1 (IG1), Ion Gauge 2 (IG2), or both can be assigned to operate either PC1 or PC2. Switches 100 and 99 are used to assign IG1 and IG2 to PC1 (K1). Switches 98 and 97 are used to assign IG1 and IG2 to PC2 (K2). The following tables define the process control operation for each combination of switch settings.

Table 5-1 *K1 (PC1) Relay.*

Switch IG1 100	Switch IG2 99	Function
OFF	OFF	Relay K1 can turn on when IG1 is ON or when IG2 is ON.
OFF	ON	Relay K1 can turn on when IG1 is ON and will turn off when IG2 is ON.
ON	OFF	Relay K1 will turn off when IG1 is ON and can turn on when IG2 is ON.
ON	ON	Relay K1 will always be off.

Table 5-2 *K2 (PC2) Relay.*

Switch IG1 (98)	Switch IG2 (97)	Function
OFF	OFF	Relay K2 can turn on when IG1 is ON or when IG2 is ON.
OFF	ON	Relay K2 can turn on when IG1 is ON and will turn off when IG2 is ON.
ON	OFF	Relay K2 will turn off when IG1 is ON and can turn on when IG2 is ON.
ON	ON	Relay K2 will always be off.

The Figure 5-5 shows the status of the process control relay contacts for the ON and OFF conditions.

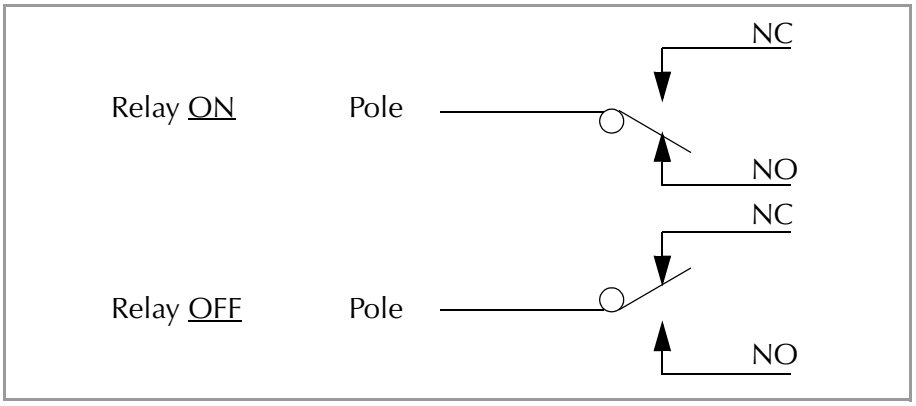

Figure 5-5 *Process Control Relay Contacts Status.*

See Figure 5-1 on page 5-72 for Process Control connector relay contact/pin assignments.

(91) — Manual Override

These six three-position switches on the front of the process control module allow override of the programmed setpoints at any time. When moved to the right, the relay is activated. When moved to the left, the relay is deactivated. When left in the center position, the relay is controlled automatically.

5.4 Process Control with User Assignable Gauges

The user assignable process control module for the Series 307 VGC allows versatile assignment of setpoints to the various gauges. The 10-position DIP Switch S7 on the process control module (Figure 5-6) is used to select the gauge and the polarity selection of the relays. This process control module is the same as the 6-channel process control module with the following exceptions:

a. **Relay Polarity Setting:** The relays will activate only when the pressure is below the set point or when the Manual Override switch is ON. The relays cannot be programmed to activate on rising pressure.

b. **Ion Gauge Assignment:** Do not use the information in Section 5.3.3 and Section 5.3.4. Use the gauge assignment information provided in Table 5-3.

c. **Gauge Assignment:** Use Switch S7 on the process control module to select the gauge. Set the DIP switches according to the settings shown in Table 5-3.

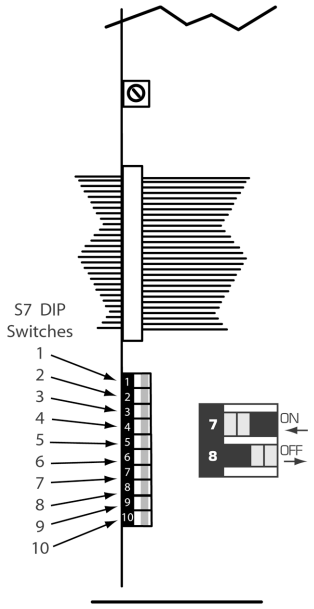

Figure 5-6 *Process Control Module with User Assignable Gauges*

Table 5-3 *Process Control User Assignable Switch Settings - Switch S7, #1 - #10*

Gauge Assignment	Switch #	Switch #	Gauge Assignment	Switch #	Switch #
PC1	**S7-1**	**S7-2**	**PC4**	**S7-7**	**S7-8**
IG *	ON	ON	IG *	ON	ON
CG/TC A	ON	OFF	CG/TC A	ON	OFF
CG/TC/CM B	OFF	ON	CG/TC/CM B	OFF	ON
Disabled	OFF	OFF	Disabled	OFF	OFF
PC2	**S7-3**	**S7-4**	**PC5**	**S7-9**	
IG *	ON	ON	IG *	ON	
CG/TC A	ON	OFF	CG/TC A	OFF	
CG/TC/CM B	OFF	ON			
Disabled	OFF	OFF			
PC3	**S7-5**	**S7-6**	**PC6**	**S7-10**	
IG *	ON	ON	IG *	ON	
CG/TC A	ON	OFF	CG/TC/CM B	OFF	
CG/TC/CM B	OFF	ON			
Disabled	OFF	OFF			
IG = Ion Gauge; CG = Convectron Gauge; TC = Thermocouple Gauge; CM = Capacitance Manometer					
*Assigning a set point to IG causes the process control relay to activate for either IG 1 or IG 2.					

5.5 Process Control Theory of Operation

The process control module contains a dedicated microcontroller and a nonvolatile memory chip for storage of the setpoints. This chip has a rated life of 10,000 erase/write cycles for each setpoint, and will retain data for 10 years. Since data is read/written to this chip serially, it is necessary to store working copies of the setpoints in internal RAM memory.

The microcontroller compares the setpoints with the pressure display data on the display bus and makes a decision as to whether or not to activate a channel's relay.

The manual override switches, when thrown in one direction or the other, take precedence over the microcontroller's decision.

5.6 Process Control Troubleshooting

If LED 95 is lit or flashing, there is a probable circuit failure.

The setpoints are read from non-volatile memory into RAM when the unit powers up. On power up, a checksum is computed and stored in RAM, and is updated whenever a setpoint is changed. It is then periodically re-computed from the existing setpoints and checked against the pre-existing value. If for any reason (such as a power fluctuation or electrical transient in the system) a setpoint becomes corrupted, this method will usually trap the error. If this occurs the fault relay will be activated, and will remain activated until power is cycled on the 307 control unit.

If a setpoint is found to contain data which is not a valid setpoint, the setpoint will be set to 0.

5.7 Process Control Specifications

Number of channels	2, or 6
Pressure range	1.0×10^{-12} to $9.9 \times 10^{+5}$. Setpoints are compared directly to display data and must be reprogrammed if the measurement units, Torr, mbar, or Pascal, are changed.
Hysteresis	10%
Setpoint adjustment	Digital, 2 significant digits plus exponent.
Output relays Contact rating Contact style	 5A @ 120 Vac, 4A @ 240 Vac resistive or 5A @ 30 Vdc. SPDT.
Polarity	Switch selectable for activation with pressure above or below setpoint. Factory set for activation below. (Activation with pressure below the setpoint, only, for User Assignable gauge configuration.)

Chapter 6

The RS-232 Module

6.1 Introduction

The RS-232 Interface Module for the 307 Vacuum Gauge Controller allows data output to, and ion gauge control by, a host computer. Output is either by a command-response mechanism or by a talk-only mode which is invoked via a switch on the RS-232 board.

A variety of baud rates and byte framing options are available, as well as switches to force the handshake lines to an “always true” condition.

6.2 RS-232 Installation

307 RS-232 factory defaults are: 300 BAUD, 7 data bits, no parity, 2 stop bits; DCD, CTS, DSR forced “true”.

The interface protocol is set using 8 switches. Reference 101 in Figure 6-1 on page 80 designates switch number 1.

6.2.1 Selecting the Byte Format

6.2.1.1 Baud Rate

Dip switches 6-8 are used to control the baud rate. The settings are shown in Table 6-1:

Table 6-1 *Dip Switches for Controlling Baud Rate.*

S6	S7	S8	Baud Rate
On	On	On	9600
On	On	Off	4800
On	Off	On	2400
On	Off	Off	1200
Off	On	On	600
Off	On	Off	300
Off	Off	On	150
Off	Off	Off	75

6.2.1.2 Character Framing

Switches 3-5 control number of characters, parity, and number of stop bits:

Table 6-2 *Dip Switches for Number of Characters, Parity and Number of Stop Bits.*

S3	S4	S5	CHARACTER BITS	PARITY	STOP BITS
On	On	On	8	None	2
On	On	Off	8	Even	1
On	Off	On	8	Odd	1
On	Off	Off	7	None	2
Off	On	On	7	Even	1
Off	On	Off	7	Odd	1
Off	Off	On	7	Even	2
Off	Off	Off	7	Odd	2

6.2.1.3 Talk-Only Mode

Switch S1, 101, if off at power-up, puts the interface in talk-only mode. The pressure data from all three displays will be output in a single message string, separated by commas, approximately every 5 seconds. If neither the Convectron nor Thermocouple Gauge Modules are present, only the ion gauge pressure will be output.

6.2.1.4 Handshake Line Control Switches

Refer to Section 6.4 RS-232 Theory of Operation on page 84 for more detailed information on the handshaking mechanism.

Switches 102, 103, and 104, when in the "up" position, force the handshake lines data-carrier-detect (DCD), clear-to-send (CTS), and data-set-ready (DSR), respectively, to a logic true condition. As shipped from the factory, these lines are forced true.

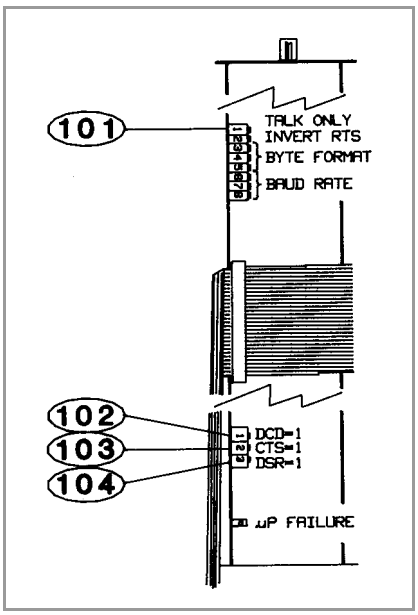

Figure 6-1 *RS-232 Module, Top View.*

6.2.1.5 Invert RTS Switch

As shipped from the factory, the request-to-send (RTS) control line is set to operate as a modem line per the RS-232 standard. In some implementations it is necessary to invert this line and hook it directly to the clear-to-send (CTS) line of the host computer.

Switch S2, if OFF when the 307 goes through its power-up sequence, tells the RS-232 interface to invert the polarity of the RTS line. See Section 6.4 RS-232 Theory of Operation on page 84, for more details.

6.3 Operation

Consult the user's manual for the host computer to be sure the protocol used is in accord with that established via the switch configuration you have chosen for the 307 RS-232 module.

Communication with the 307 VGC is via ASCII strings. A message to 307 consists of a command and a command modifier, followed by a terminator. The message may contain leading spaces, and the command and modifier may optionally be separated by spaces or commas. No spaces may appear within the command or the modifier, only between them.

The terminator expected by 307 is an ASCII carriage-return line-feed, denoted here by CRLF. The carriage-return is optional, and messages terminated with only the line-feed will be accepted. Note that the CRLF terminator is in general appended automatically, by the host computer's interface software, to the message string supplied by the user.

If extra characters are found in the message after it has been successfully interpreted but before the terminator, they will be ignored.

All characters should be upper-case.

All messages to 307 will receive a reply, consisting of an ASCII string terminated with CRLF. Numbers will be returned in the format X.XXE±XX.

6.3.1 Command Syntax

DG

Definition: Turn degas on or off

Modifiers: **ON** or **OFF**

Response: **OK** if command accepted, or **INVALID** if rejected.

Example: From computer: **DG ON CRLF**

From 307: **OKCRLF**

NOTES

1. Command is INVALID if neither IG is on.
2. A response to the **DG ON** command of **OK** indicates only that a signal requesting degas has been sent to the electrometer. Degas may fail to activate, e.g., if the pressure is above 5×10^{-5} Torr, or if your 307 does not have degas capability. Use the **DGS** command (see below) to verify that degas has been successfully initiated.

DGS

Definition: Display degas status

Modifiers: None

Response: ASCII 1 if degas is on, 0 if degas is off

Example: From computer: **DGSCRLF** (Note: Spaces may be omitted)

From 307: **1CRLF**

(Indicating degas is on)

DS

Definition: Display pressure reading

Modifiers: **IG1** or **IG2** or **IG** or **CG1** or **CG2**

Response: ASCII string representing the pressure for the selected gauge

Example: From computer: **DS CG1 CRLF**

From 307: **1.20E-03CRLF**

NOTES

1. The **DS CG1** and **DS CG2** commands are used to display the pressures from the second 2 display lines, with either the Convectron, Thermocouple, or Capacitance Manometer Gauge Module installed.
2. If the requested ion gauge is turned off, or is in its first few seconds of operation, or data is requested from a Convectron, Thermocouple, or Capacitance Manometer Gauge when none is installed, the 307 will return **9.90E+09**.
3. The **DS IG** command will return pressure from whichever ion gauge is on, and **9.90E+09** if neither ion gauge is on.

IG1

Definition: Turn IG1 on or off

Modifiers: **ON** or **OFF**

Response: **OK** if command accepted, **INVALID** if rejected

Example: From computer: **IG1 ON CRLF**

From 307: **OKCRLF**

NOTES

1. The **IG1 ON** command will be rejected as **INVALID** if **IG1** is already on, and **IG1 OFF** will be rejected if **IG1** is already off.
2. A response to the **IG1 ON** command of **OK** indicates only that a signal requesting that IG1 be turned on has been sent to the electrometer. The tube may fail to come on, e.g., if the system pressure is too high or if the tube is disconnected. To verify that IG1 is on, use the DS IG1 command. If the tube is off (or in its first few seconds of operation after being turned on) a pressure of **9.90E+9** will be returned.

IG2

Identical to **IG1**, but applies to IG2.

PCS

Definition: Display process control channel status

Modifiers: **1** or **2** or **3** or **4** or **5** or **6** or **B** or none.

Response: Depends on modifier:

Modifier = single digit (1 through 6); response = single ASCII digit, **0** if the corresponding relay is inactive, **1** if active.

Modifier = **B**; response = a byte of data with bits 0 through 5 set/clear according to whether the corresponding relay is active/inactive. Bit 6 will always be set to guarantee that the returned byte will not appear as a terminator byte.

Modifier absent; response will be a string of 6 ASCII 0's and 1's separated by commas giving the status of all six channels.

Examples: Assume that channels 1 - 3 are active, and 4 - 6 are inactive.

From computer: **PCS 1 CRLF**

From 307: **1CRLF**

From computer: **PCS B CRLF**

From 307: **GCRLF**

NOTE: Note that ASCII "G" corresponds to the bit pattern 01000111 and represents the status of the PC channels.

From computer: **PCS CRLF**

From 307: **1,1,1,0,0,0CRLF**

6.3.2 Error Messages

If an error is found in the incoming message, the following messages will be returned in place of the normal response:

OVERRUN ERROR	Returned if the incoming message overflows 307's buffer. This may indicate a flaw in the host software.
PARITY ERROR	Returned if the parity of a byte in the incoming message does not match that programmed by the switches.
SYNTAX ERROR	Returned if the message fails to parse as a valid 307 command. Could also result from failure to assert DCD during transmission to 307.

6.4 RS-232 Theory of Operation

6.4.1 Handshaking

The 307 RS-232 interface implements the signals given in Table 6-3.

Table 6-3 *RS-232 Control Lines.*

Signal	Pin #	Direction
Protective Ground	1	-
Transmitted Data	2	To Computer
Received Data	3	To 307
Request to Send (RTS)	4	To Computer
Clear to Send (CTS)	5	To 307
Data Set Ready (DSR)	6	To 307
Signal Ground (common return)	7	-
Data Carrier Detect (DCD)	8	To 307
Data Terminal Ready (DTR)	20	To Computer

The DTR line is set true by 307 on power up to indicate it is on line. When 307 receives a start bit on the received data line it will input and buffer a character. The DCD line must be true at the time each character is received or that character will be ignored. 307 will continue to receive and buffer characters until the terminator (LF) is received.

Upon receiving the terminator, 307 will assert the RTS line as a holdoff, to prevent the host computer from attempting to transmit further data until the message just received has been parsed and a reply has been output.

During output of the reply, the incoming handshake lines CTS, and DSR are tested prior to beginning transmission of each character. 307 will wait until both are true before beginning transmission of a character, and will not test them again until ready to begin transmitting the next.

After transmitting the terminator, 307 will negate RTS and wait for the next incoming message.

To summarize:

CTS, DSR

Set by the computer to indicate that 307 may output the next byte in its message. As shipped from the factory these lines are forced “TRUE” by the switch settings of the 307 RS-232 printed circuit board, thus 307 will automatically assume the host is ready to receive. See Figure 6-1 on page 80 for the location of these switches.

DCD

Tested by 307 when a character is received. The character will be ignored unless DCD is “TRUE”. As shipped from the factory this line is forced “TRUE” by the switch settings.

DTR

Always asserted by 307. A “power on” indication.

RTS

Negated by 307 on power-up. Asserted by 307 upon receipt of a message terminator.

Negated after transmitting the terminator of 307's response to that message.

Reversing the Polarity of RTS

If switch 2, 105, is open on power-up, 307 will apply the opposite polarity to RTS from that described above. When used in this mode RTS may be connected to the CTS input of the host computer. This violates the RS-232 standard, but is a commonly used implementation.

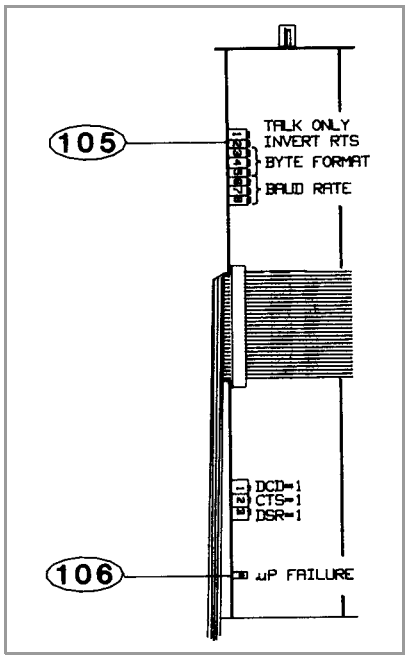

Figure 6-2 *RS-232 Module, Top View.*

6.5 RS-232 Troubleshooting

Because the RS-232 “standard” is found in a bewildering array of configurations, the first thing to do if trouble arises is check the following configuration options:

1. Check switch settings.

Be sure baud rate, character format and framing, and interface protocol are matched to your host computer or terminal's requirements. Note that there may be several mismatched parameters. Check to see if your computer requires the reversed-polarity RTS convention.

2. Check interface wiring.

The pin designations for the RS-232 connector are shown in Figure 6-2. Note that the “received” and “transmitted” data lines are defined as seen by the 307. Many companies supply “null modems” or switch boxes for the purpose of reconfiguring the control lines for particular applications.

3. Check command format.

Be sure the strings you output to the 307 are in accord with the syntax defined in Section 6.3 Operation on page 81.

Table 6-4 *RS-232 Troubleshooting Guide.*

Symptom	Possible Cause
Microcontroller reset LED (106) lit or flashing.	Microcontroller failure.
No response or garbled output.	Baud rate incorrect. Character length incorrect or stop bit(s) incorrect.
OVERRUN ERROR message.	Stop bit(s) incorrect, host software failure.
PARITY ERROR message.	Parity incorrect.
SYNTAX ERROR message.	Message to 307 not in accord with specified syntax. Could also result from failure to assert DCD handshake line.

6.6 RS-232 Specifications

Format	EIA standard RS-232-C, half duplex, asynchronous.
Data Rates	75,150,300,600,1200,2400,4800,9600 baud.
Character length	7 or 8 bit ASCII, switch selectable.
Parity	Odd, even, or none, switch selectable.
Stop bits	1 or 2 (8 character bits plus parity allows only 1 stop bit)
Handshake	Outputs: DTR, RTS (RTS polarity selectable) Inputs: DSR, CTS, DCD. May be forced to logic “TRUE” with switches.
Logic levels	Inputs: Logic 1 2.0 Vdc min., 15 Vdc max. Logic 0 -15 Vdc min., 0.75 Vdc max. Input Current: 4.0 mA max @ Vin = +15 Vdc -4.0 mA max @ Vin = -15 Vdc.

7.1 RS-485 Introduction

The RS-485 communications option for the Series 307 Vacuum Gauge Controller permits data output to, and gauge control by, a host computer using RS-485 digital communications. Communications handshake is by a command-response mechanism.

A variety of baud rates and byte framing options are available. The RS-485 byte format is configured to your system requirements using configuration switches located on the option board. These switches are accessed by removing the controller top chassis cover.

The RS-485 factory defaults are:

- 9600 BAUD, 8 character bits, no parity, 1 stop bit, Address = 01

Internal switches are read upon power up. Changes in settings will take effect upon next power-up cycle.

7.2 RS-485 Installation

7.2.1 RS-485 Address

The address dial on the RS-485 module on the back of the controller and Switch S1determine the controller's RS-485 address. This address can be any hex code from 00 to FF.

The address dial on the RS-485 module on the back of the controller determines the value of the least significant digit and the S1 switches determine the value of the most significant digit. The S1 switch positions are binary and the weight of each switch when OFF is given in Table 7-1.

To prevent data contentions, no two RS-485 nodes should be set with the same address. It is not recommended that address 00 be used because some manufacturers use this address for configuration.

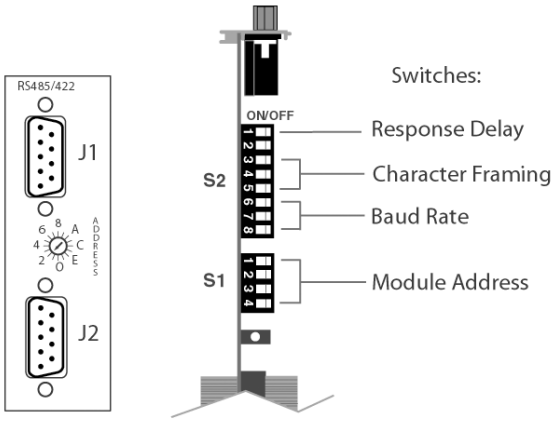

Figure 7-1 *Back Panel and Top View of RS-485 Module*

Table 7-1 *Switch Weight When OFF*

Switch	Weight
S1.1	10 Hex
S1.2	20 Hex
S1.3	40 Hex
S1.4	80 Hex

7.2.2 Response Delay for the RS-485 Interface

Switch S2.1 enables a delay of the response from the module of 10 to 13 MS + 10 bit times when OFF. When S2.1 is ON, the delay is greater than 700 microseconds. The factory default setting is ON, with a delay greater than 700 microseconds.

7.2.3 Selecting the Byte Format for RS-485 Communications

Baud rate for the RS-485 communications is determined by the settings of switches S2.6, S2.7 and S2.8. Table 7-2 defines the baud rate base on the switch settings. The factory default baud rate setting is 9600.

Table 7-2 *Baud Rate Switch Settings*

S2.6	S2.7	S2.8	Baud Rate
ON*	ON*	OFF*	9600*
ON	OFF	ON	4800
ON	OFF	OFF	2400
OFF	ON	ON	1200
OFF	ON	OFF	600
OFF	OFF	ON	300
OFF	OFF	OFF	150

7.2.4 Character Framing for the RS-485 Computer Interface

Character framing for the RS-485 computer interface is determined by setting switches S2.3, S2.4, and S2.5. Table 7-3 defines the character bits, parity, and stop bits based on the switch settings. The factory default setting is S2.3 On, S2.4 Off, and S2.5 Off - Character bits set to 8, Parity None, and Stops bits at 1.

Table 7-3 *Character Framing Switch Settings*

S2.3	S2.4	S2.5	Character Bits	Parity	Stop Bits
ON	ON	ON	8	None	2
ON	ON	OFF	8	Even	1
ON	OFF	ON	8	Odd	1
ON	OFF	OFF	8*	None*	1*
OFF	ON	ON	7	Even	1
OFF	ON	OFF	7	Odd	1
OFF	OFF	ON	7	Even	2
OFF	OFF	OFF	7	Odd	2

* factory setting

7.2.5 Connecting the RS-485 Computer Interface

Connectors J1 and J2 on the rear of the control unit are wired parallel and are interchangeable. Connection can be made by daisy chaining gauge controllers together with the signal from the host computer going into one connector, then out the other connector to another gauge controller.

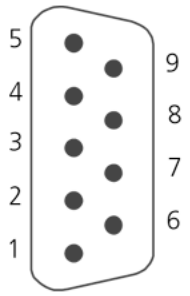

RS-485 Signals	Pin Number
+TX	4
-TX	5
+RX	8
-RX	9
Ground	3

Figure 7-2 *RS-485 Connector*

The maximum total cable length is 4,000 ft. No more than 32 devices can be connected to one RS-485 communications line. When an RS-485 network is in an idle state, all nodes are in listen (receive) mode. Under this condition there are no active drivers on the network. In order to maintain the proper idle voltage state, bias resistors must be applied to force the data lines to the idle condition.Table 7-3 illustrates the placement of bias resistors on a host computer, 2-wire configuration, for the typical 5 volt and 24 volt systems.

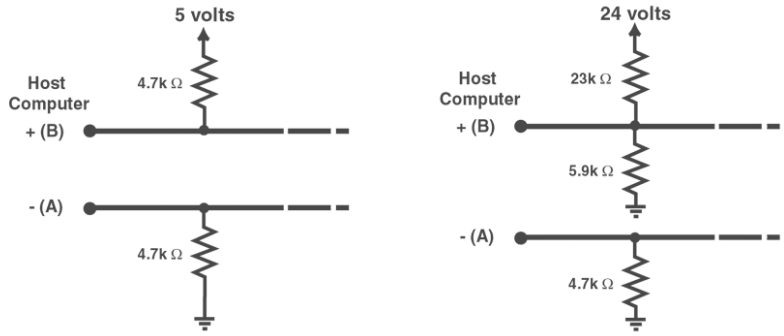

Figure 7-3 *RS-485 Bias Resistor*

In a four wire configuration connect TX on the gauge controller to RX on the host computer and connect RX on the gauge controller to TX on the host computer. If the computer sends and receives data on 2 wires, connect the RS-485+ from the computer to both the +TX and +RX Pins (Pins 4 and 8), and connect the RS-485 from the computer to both -TX to -RX (Pins 5 and 9). Table 7-4 shows the proper wire connections for a 2-wire connection.

When connecting multiple 307 Controllers, connect TX to TX and RX to RX on all controllers.

The polarity may have to be reversed on the computer and other instruments—you may have to try it both ways. No damage will result if connections are wrong.

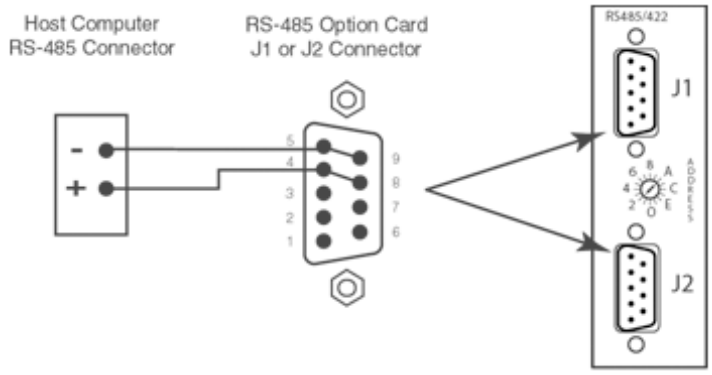

Figure 7-4 *RS-485 Connectors*

Table 7-4 *RS-485 Specifications*

Function	Specification
Communications Format	RS-485, half-duplex, asynchronous
Data Rate	9600 (Default), 4800, 2400, 1200, 600, 300, 150 baud
Character Length	8-bit or 7-bit ASCII (Factory default is 8-bit)
Parity	No parity, even or odd (Factory default is None)
Stop Bits	1 or 2 (Factory default is 1)
Handshake	None (Poll/Response)
Address	256 selectable combinations (Factory default is 01)
Number of Connections	Up to 32 devices
Total Cable Length	4,000 feet maximum
Connectors	Two 9-pin D-sub (Parallel)

7.3 Preparing for use of the RS-485 Computer Interface

The Series 307 Vacuum Gauge Controller uses a command-response half-duplex protocol. If the controller recognizes received data as a valid command, it will check the command string address and compare with its own. If the addresses match, the controller will process the command and then respond. In all configurations, only one twisted pair will have data transmissions in one direction at any time. The timing of the data transfer is shown in Table 7-5. T0 is 10-13 mS + 10 bit times with S2.1 in the OFF position, T0 is greater than 700 microseconds with S2.1 in the ON position, and T1 is greater than 300 microseconds. Adhering to these timing constraints will ensure data is not overwritten.

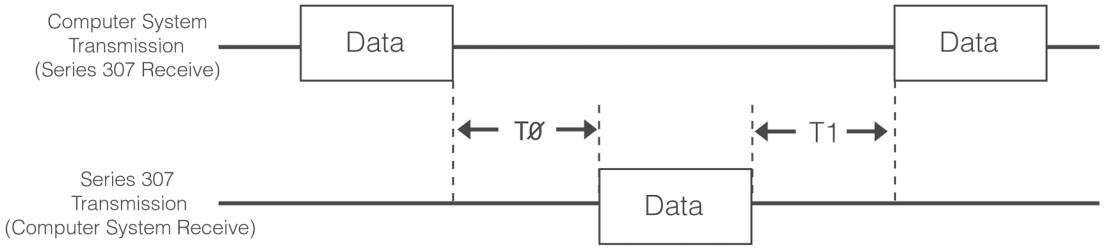

Figure 7-5 *RS-485 Data Timing*

Consult the user's manual for the host computer to be sure the character framing settings used are in accord with that established via the switch configuration you have chosen for the RS-485 module.

Communication is via ASCII strings. A message to consists of a start character “#”, an address “AA”, command, and a command modifier, followed by a terminator. The message may contain leading spaces, and the command and modifier may optionally be separated by spaces. No spaces may appear within the command or the modifier, only between them.

The address expected is programmed via the switch settings on the rear of the module. The syntax is “#AA” where AA is an ASCII representation of the hex address of the controller. The terminator expected is an ASCII carriage-return denoted here by CR. Note that the terminator is sometimes appended automatically, by the host computer's interface software, to the message string supplied by the user. If extra characters are found in the message after it has been successfully interpreted but before the terminator, they will be ignored.

All messages will receive a reply, consisting of an ASCII string terminated with CR. Pressure numbers will be returned in the format X.XXE±XX.

Messages may use upper or lower case alpha-numeric characters. The controller will always respond with upper case characters.

7.4 RS-485 Command Syntax

IG1

Definition: Turn IG1 on or off.

Modifiers: **ON** or **OFF**

Response: **OK** if command accepted, **INVALID** if rejected.

Example: From computer: **IG1 ONCRLF**

From 307 controller: **OKCRLF**

NOTES

1. The **IG1 ON** command will be rejected as **INVALID** if IG1 is already on, and **IG1 OFF** will be rejected if IG1 is already off.
2. A response to the **IG1 ON** command of **OK** indicates only that a signal requesting that IG1 be turned on has been sent to the electrometer. IG1 may fail to come on, e.g., if the system pressure is too high or if the gauge is disconnected. To verify that IG1 is on, use the **DS IG1** command. If the gauge is off, or in its first few seconds of operation after being turned on, a pressure of **9.99E+9** will be returned.

IG2

Identical to **IG1,** but applies to IG2.

DG

Definition: Turn degas on or off

Modifiers: **ON** or **OFF**

Response: **OK** if command accepted, or **INVALID** if rejected.

Example: From computer: **DG ON CRLF**

From 307 controller: **OKCRLF**

NOTES

1. Command is INVALID if neither IG is on.
2. A response to the DG ON command of OK indicates only that a signal requesting degas has been sent to the electrometer. Degas will not activate if the pressure is above 5×10^{-5} Torr. Use the DGS command (see below) to verify that degas has been successfully initiated.

DS

Definition: Display pressure reading.

Modifiers: **IG1** or **IG2** or **IG** or **CG1** or **CG2**.

Response: ASCII string representing the pressure for the selected gauge.

Example: From computer: **DS CG1 CRLF**

From 307 controller: **1.25E-03CRLF**

NOTES

1. The **DS CG1** and **DS CG2** commands are used to display the pressures from the lower 2 display lines with the Convectron Gauge Module installed.
2. If the requested ion gauge is turned off, or is in its first few seconds of operation, or data is requested from a Convectron Gauge when none is installed, the Control Unit will return 9.90E+09.

   The **DS IG** command will return pressure from the gauge which is on, and **9.99E+09** if neither is on.

DGS

Definition: Display degas status.

Modifiers: None

Response: ASCII **1** if degas is on, **0** if degas is off.

Example: From computer: **DGS CRLF**
From 307 controller: **1CRLF**

PCS

Definition: Display process control channel status.

Modifiers: **1** or **2** or **3** or **4** or **5** or **6** or **B** or none.

Response: Depends on modifier:

Modifier = single digit (1 through 6); response = single ASCII digit, **0** if the corresponding relay is inactive, **1** if active. See Example 1.

Modifier = **B**; response = a byte of data with bits 0 through 5 set/clear according to whether the corresponding relay is active/inactive. Bit 6 will always be set to guarantee that the returned byte will not appear as a terminator byte.
See Example 2.

Modifier absent; response will be a string of 6 ASCII 0's and 1's separated by commas giving the status of all six channels. See Example 3.

Examples: Assume that channels 1 - 3 are active, and 4 - 6 are inactive:

1. From computer: **PCS 1 CRLF**

From 307 controller: **1CRLF**

2. From computer: **PCS B CRLF**

From 307 controller: **GCRLF**

(Note that ASCII “G” corresponds to the bit pattern 01000111 and represents the status of the PC channels in bits 0 through 5).

3. 3.From computer: **PCS CRLF**

From 307 controller: **1,1,1,0,0,0 CRLF**

Error Messages

If an error is found in the incoming message, the following messages will be returned in place of the normal response.

OVERRUN ERROR - Returned if the incoming message overflows the controller’s buffer.

SYNTAX ERROR - Returned if the message fails to parse as a valid controller command.

7.5 RS-485 Troubleshooting

In the event of problems with the RS-485 communications verify the following items for proper configuration.

1. Check the configuration switch settings.

Ensure the baud rate, character framing, and interface protocol are matched to the host computer or terminal's requirements. Note that there may be several mismatched parameters.

2. Check command format.

Ensure that the command strings output from the host computer or terminal to the 307 Controller are in accordance with the syntax defined by this addendum.

Table 7-5 *RS-485 Troubleshooting Guide*

Symptom	Possible Cause
Micro-controller reset LED CR1 illuminated or flashing	Micro-controller failure.
No response or garbled output	Baud rate incorrect, character length incorrect, character framing incorrect, or bias resistors do not exist or are incorrect.
Intermittently will not respond	Poor cable connections, ground fluctuations (the maximum common mode potential across the system is 7 volts) and EMI from other sources. Bias resistors do not exist or are incorrect. If the start character is not received properly, the controller may not interpret it as a start character and the controller will not respond. Host software must be prepared to re-send a command if a response is not generated within a reasonable period of time.
OVERRUN ERROR message	Stop bit(s) incorrect, host software failure.
PARITY ERROR message	Parity incorrect.
SYNTAX ERROR message	Message to Controller not in accord with specified syntax.

8.1 Introduction

The IEEE 488 Module for the 307 Vacuum Gauge Controller allows data output to, and ion gauge control by, a host computer. Output is either by a command-response mechanism or by a talk-only mode which is invoked via a switch on the IEEE 488 board.

For those who want to configure the 488 bus to operate via SRQ interrupts, a switch is provided which will cause the 307 to generate an SRQ and wait for a serial poll before outputting each message.

8.2 IEEE 488 Installation

8.2.1 Selecting the Interface Bus Address

Refer to Figure 8-1, switch No. 1 is shown by 107. Each instrument on the IEEE 488 bus has an address from 0 to 30. The address is set at the factory to 8. The user must ensure that every device on his bus has a unique address. To select an address, use switches 1 through 5 to adjust the address according to the following binary weight values. Setting a switch to OFF adds the value of the numbered switch to the address sum. See Table 8-1, below.

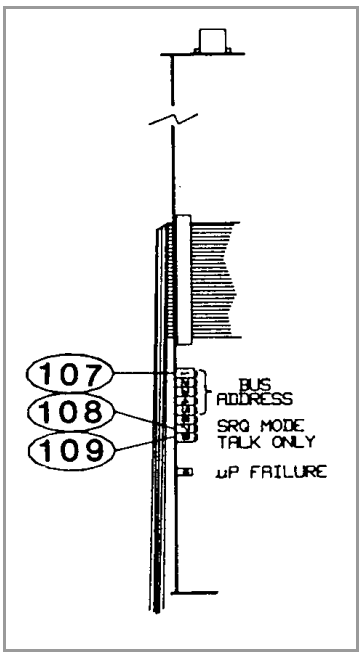

Figure 8-1 *IEEE 488 Module Top View.*

Table 8-1 *Switches for setting the Interface Bus Address*

Switch #:	5	4	3	2	1		
Value:	16	8	4	2	1		
Examples							
Setting	On	Off	On	On	Off	=	address 9
Setting	On	On	Off	Off	Off	=	address 7
Setting	Off	Off	Off	On	On	=	address 28

8.2.2 Talk-only Mode

Switch 8, 109, if set to off on power-up, puts the interface in talk-only mode. The pressure data from all three displays will be output in a single message string, separated by commas, approximately every 5 seconds. If neither the Convectron nor Thermocouple Gauge Modules are present, only the ion gauge pressure will be output. The factory default is talk-only disabled.

8.2.3 SRQ Mode

Switch 7, 108, if set to off on power-up, tells the interface to generate an SRQ interrupt and expect a serial poll before every message output. Currently, the factory default is SRQ mode disabled (switch 7 “ON”), but early 307's were shipped with SRQ enabled.

The serial poll response byte will contain a 1 in bit 6 (the second-highest bit). Bit 5 will be set if an error has occurred. In this case the pending message will be an error message.

8.3 IEEE 488 Operation

Communication with 307 is via ASCII strings. A message to 307 consists of a command and a command modifier, followed by a terminator. The message may contain leading spaces, and the command and modifier may optionally be separated by spaces or commas. No spaces may appear within the command or the modifier, only between them.

The terminator accepted by 307 is an ASCII carriage-return line-feed, denoted here by CRLF. The carriage-return is optional, and messages terminated with only the line-feed will be accepted. Note that the CRLF terminator is in general appended automatically, by the host computer's interface software, to the message string supplied by the user.

A terminator is not required, if the last character of the message to the 307 VGC is accompanied by the EOI bus signal. If extra characters are found in the message after it has been successfully interpreted but before the terminator, they will be ignored. **All characters should be upper-case**.

All messages to 307 will receive a reply, consisting of an ASCII string terminated with CRLF, the LF being accompanied by EOI. Numbers will be returned in the format X.XXE+/-XX.

8.3.1 Command Syntax

DG

Definition: Turn degas on or off

Modifiers: **ON** or **OFF**

Response: **OK** if command accepted, or **INVALID** if rejected.

Example: From computer: **DG ON CRLF**

From 307: **OKCRLF**

NOTES

1. Command is **INVALID** if neither IG is on.
2. A response to the **DG ON** command of **OK** indicates only that a signal requesting degas has been sent to the electrometer. Degas may fail to activate, e.g., if the pressure is above 5×10^{-5} Torr, or if your 307 does not have degas capability. Use the **DGS** command (see below) to verify that degas has been successfully initiated.

DGS

Definition: Display degas status

Modifiers: None

Response: ASCII **1** if degas is on, **0** if degas is off

Example: From computer: **DGSCRLF** (**Note**: Spaces may be omitted)

From 307: **1CRLF**
(Indicating degas is on)

DS

Definition: Display pressure reading.

Modifiers: **IG1** or **IG2** or **IG** or **CG1** or **CG2**.

Response: ASCII string representing the pressure for the selected gauge.

Example: From computer: **DS CG1 CRLF**

From 307: **1.20E-03CRLF**

NOTES

1. The **DS CG1** and **DS CG2** commands are used to display the pressures from the second 2 display lines, with either the Convectron, Thermocouple, or Capacitance Manometer Gauge Module installed.
2. If the requested ion gauge is turned off, or is in it's first few seconds of operation, or data is requested from a Convectron, Thermocouple, or Capacitance Manometer Gauge when none is installed, the 307 will return **9.90E+09**.
3. The **DS IG** command will return pressure from whichever gauge is on, and **9.90E+09** if neither is on.

IG1

Definition: Turn IG1 on or off

Modifiers: **ON** or **OFF**

Response: **OK** if command accepted, **INVALID** if rejected

Example: From computer: **IG1 ONCRLF**

From 307: **OKCRLF**

NOTES

1. The **IG1 ON** command will be rejected as **INVALID** if IG1 is already on, and **IG1 OFF** will be rejected if IG1 is already off.
2. A response to the **IG1 ON** command of **OK** indicates only that a signal requesting that IG1 be turned on has been sent to the electrometer. The tube may fail to come on, e.g., if the system pressure is too high or if the tube is disconnected. To verify that IG1 is on, use the DS IG1 command. If the tube is off (or in its first few seconds of operation after being turned on) a pressure of **9.90E+9** will be returned.

IG2

Identical to **IG1**, but applies to IG2.

PCS

Definition: Display process control channel status.

Modifiers: **1** or **2** or **3** or **4** or **5** or **6** or **B** or none.

Response: Depends on modifier:

Modifier = single digit (1 through 6); response = single ASCII digit, 0 if the corresponding relay is inactive, 1 if active.

Modifier = **B**; response = a byte of data with bits 0 through 5 set/clear according to whether the corresponding relay is active/inactive. Bit 6 will always be set to guarantee that the returned byte will not appear as a terminator byte.

Modifier absent; response will be a string of 6 ASCII 0's and 1's separated by commas giving the status of all six channels.

Examples: Assume that channels 1 - 3 are active, and 4 - 6 are inactive:

From computer: **PCS 1 CRLF**

From 307: **1CRLF**

From computer: **PCS B CRLF**

From 307: **GCRLF**

(Note that ASCII "G" corresponds to the bit pattern 01000111 and represents the status of the PC channels in bits 0 through 5).

From computer: **PCS CRLF**

From 307: **1,1,1,0,0,0CRLF**

8.3.2 Error Messages

If an error is found in the incoming message, the following messages will be returned in place of the normal response, and if the SRQ mode is used, bit 5 in the serial poll response byte will be set.

OVERRUN ERROR Returned if the incoming message overflows 307's buffer.

SYNTAX ERROR Returned if the message fails to parse as a valid 307 command.

8.4 IEEE-488 Troubleshooting

If your interface fails to function, first verify the following:

1. Switch settings.

Be sure the controller knows the address of the 307 as set by the dip switches. Be sure the system controller does not reserve certain addresses for system devices, e.g., a printer. Be sure the 307 is not in the talk-only mode unless desired for data logging. Be sure, if the SRQ mode is set, that your controller performs a serial poll in response to the SRQ from the 307 VGC.

2. Check interface wiring.

Be sure the cable is good; try swapping in a known good cable (IEEE 488 cables are available from Granville-Phillips). Check for too many devices on the bus or too great a total bus length (> 20 meters). Too many devices could cause problems due to capacitive loading.

3. Check command syntax.

Be sure you are following the syntax specified in Section 8.3 IEEE 488 Operation on page 96.

.

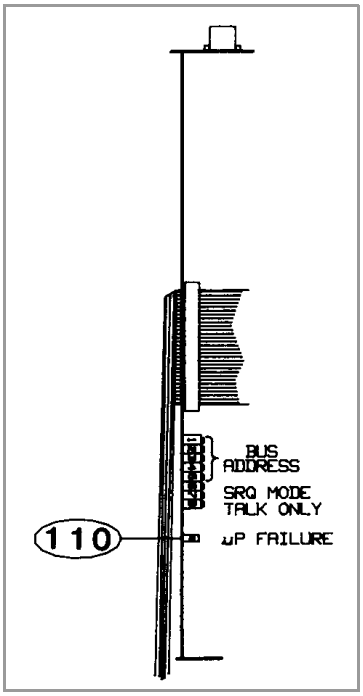

Figure 8-2 *IEEE 488 Module Top View*

Table 8-2 *IEEE 488 Troubleshooting Guide*

Symptom	Possible Cause
Microcontroller reset LED (110) lit.	Microcontroller failure.
OVERRUN ERROR message.	Host software failure.
SYNTAX ERROR message.	Message to 307 not in accord with specified syntax.

8.5 IEEE 488 Specifications

Capability codes	SH1, AH1, T5, L4, SR1, RL0, PP0, DC0, E1, OT0, C0

Chapter 9

The Convectron/Capacitance Manometer Module

9.1 Introduction

The capacitance manometer module allows pressure measurement from 1.0 x 10^{-4} Torr to 1000 Torr, depending on transducer pressure range. Up to 250 mA of ±15 VDC power supply current is available for temperature-compensated transducers.

The module also operates one Convectron gauge. Please see Chapter 3, The Convectron Gauge Module, in this manual for information on the use of the Convectron gauge.

When a six channel process control module is installed, the capacitance manometer can be used to control the two channels associated with display line "B", channels 5 and 6. The associated "A" Convectron gauge controls channels 3 and 4.

Analog output is provided for both gauges; the output is linear with pressure for the manometer, and logarithmic for the Convectron.

9.2 Installation

9.2.1 Units of Measure

Your instrument will have been shipped from the factory pre-set to display the unit of measure; torr, millibar, or pascal, that you requested. If you wish to change units, proceed as follows:

1. Shut off power to the control unit.
2. Remove the top cover. Locate the capacitance manometer pc board.
3. Locate 111, the millibar, and 112 the pascal, units switches.
4. Leave both switch open for torr units. Close the appropriate switch for millibar or pascal units.

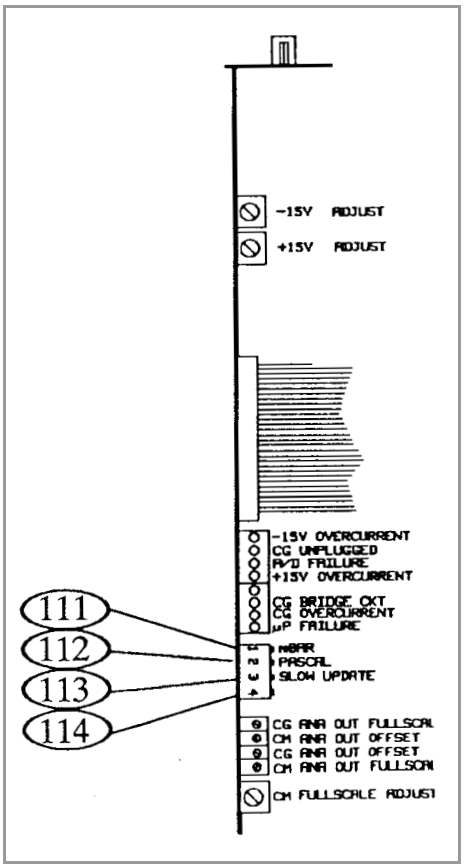

Figure 9-1 *Convectron/Capacitance Manometer, Top View.*

5. Modify the units of measure of the electrometer module to be consistent with the capacitance manometer module.
6. Slip the label card out of the top of the front panel and apply the appropriate pressure units label.

113 — Display Update Rate Switch

When "on" this switch enables filtering which will stabilize a "jumpy" display. The display wills be updated approximately every 3 seconds.

114 — Not used.

115 — *Convectron* Gauge Controls

See Chapter 3, The Convectron Gauge Module for information on use of Convectron controls.

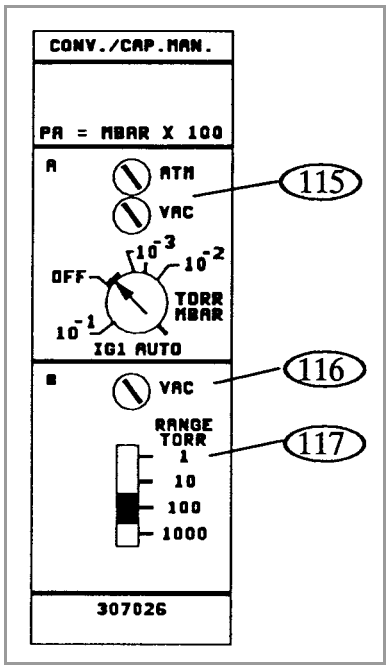

Figure 9-2 *Capacitance Manometer Module, Front Panel.*

116 — Capacitance Manometer Vacuum Calibration

See Section 9.4 Calibration on page 104.

117 — Capacitance Manometer Range Switch

Your capacitance manometer transducer has a maximum pressure indication of 1, 10, 100, or 1000 Torr. Set this switch accordingly.

9.2.2 Capacitance Manometer Cable Installation

The cable supplied by Granville-Phillips for this module connects to both a Convectron gauge and a capacitance manometer. Since electrical connectors to capacitance manometers are not standardized, Granville-Phillips provides cables terminated with tinned wire leads. Figure 9-3 on page 103 shows the color-coded functions of the wires. Please consult the manual for your capacitance manometer transducer for information on electrical connection, and installation of the transducer in your vacuum system.

The 307 VGC will display pressures from capacitance manometer transducers with 0 to 10 Vdc outputs and provide power to transducers requiring ± 15 Vdc inputs. The 307 VGC may also be used as a readout device for capacitance manometers which require 115 Vdc power input, such as the MKS 220B. To wire the 307 to such a transducer, connect the white (+ signal), and brown (signal ground) wires to the manometer as directed in the transducer instruction manual. Insulate the remaining red (+15 V), black (power ground) and blue (-15 V) wires at the manometer end of the 307 cable. Connect the transducer to a 115 Vac power source as directed in your capacitance manometer instruction manual.

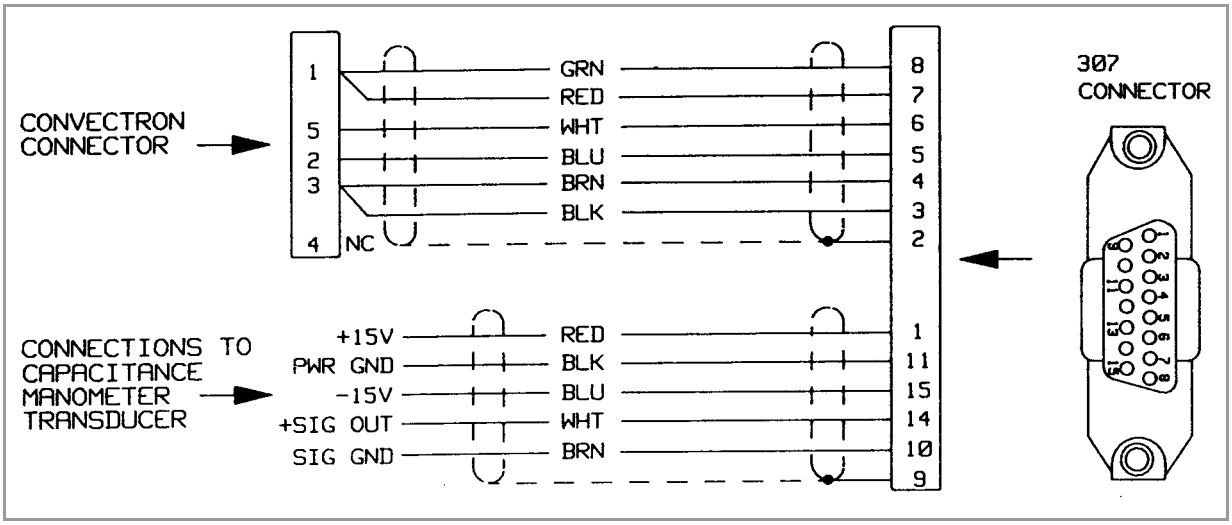

Figure 9-3 *Capacitance Manometer Module, Cable.*

9.3 Operation

9.3.1 Reading Pressure

The capacitance manometer pressure is read in the third display line of the 307 controller. The accompanying Convectron gauge is read in the second display line. If the cable is disconnected, the manometer will read 0 pressure.

9.3.2 Analog Output

On the rear panel are provided analog outputs for both the Convectron gauge, 118 and capacitance manometer, 119.

Standard 1/8 inch miniature phono jack connectors are provided for the analog output.

The analog output for the capacitance manometer is a dc voltage proportional to the pressure with a range of 0 to 10 volts, proportional to the transducer output. See the documentation for your transducer for a description of this output.

Internal adjustments are provided for zero offset and full-scale (gain) control. See Section 9.4 Calibration on page 104 for adjustment.

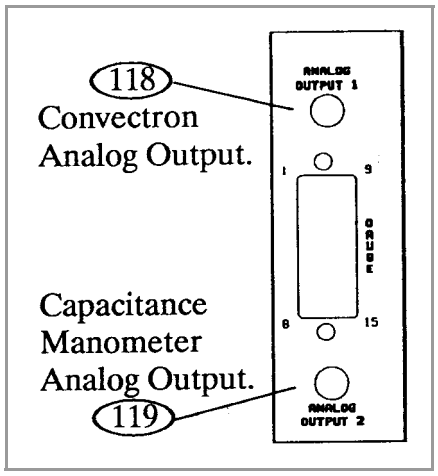

Figure 9-4 *Capacitance Manometer Module, Rear Panel.*

9.4 Calibration

9.4.1 Initial Transducer Calibration

When first installed, your transducer zero-adjust should be set using a voltmeter to read zero when at a system pressure below the minimum pressure range of the transducer. Please refer to the documentation accompanying your capacitance manometer transducer for instructions on this procedure. You should also at this time adjust the VAC on the 307 controller (116), with the gauge not attached to the controller, per the instructions below. After this initial setup has been performed, the routine fine-tuning of the transducer zero may be performed with the module front panel zero adjust potentiometer. The zero can be adjusted to 0 ± 200 mV.

To Set The Controller Zero (Initial Controller Setup):

1. Disconnect the capacitance manometer cable either at the gauge head or at the controller.
2. Adjust the vacuum potentiometer (116) until the third display line shows a single "0". If the adjustment is turned too far, a minus sign will appear in the display. This proper calibration is achieved when only the "0" appears.

To Zero The 307 VGC with the Transducer:

1. Be sure the transducer was zeroed properly on initial installation, see your transducer documentation. Connect the cable from the 307 VGC to the capacitance manometer transducer per Figure 9-3 on page 103.
2. Evacuate your system to below the minimum rated pressure of your transducer.
3. Adjust the vacuum potentiometer (116) until the third display line shows a single "0". If the adjustment is turned too far, a minus sign will appear in the display. This proper calibration is achieved when only the "0" appears.

(128), (130) — *Convectron* Controls

See Section 3.5 Convectron Calibration and Maintenance on page 60 of this manual.

(129) — Capacitance Manometer Analog Output Offset Adjust

This potentiometer is used to set analog output 2 at zero pressure. This value is affected by the vacuum adjust potentiometer (116). The output can be adjusted to between -0.02 and +0.02 volts at zero pressure.

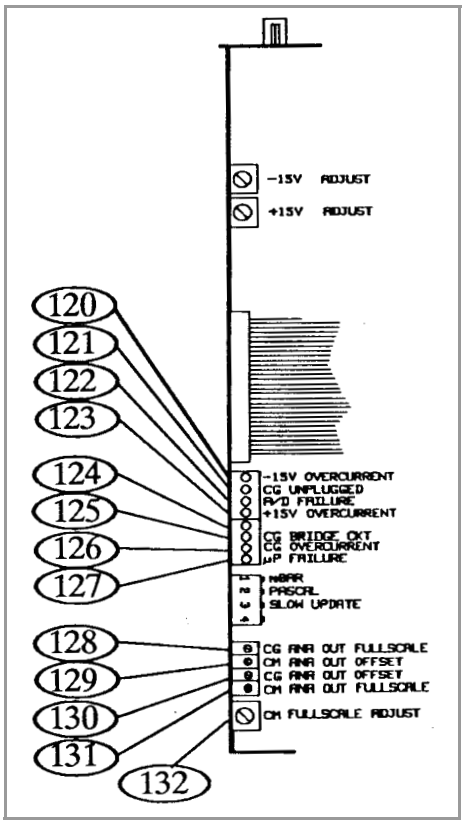

Figure 9-5 *Capacitance Manometer Module*

(131) — Capacitance Manometer Analog Output Full-Scale Adjust

This is a span or gain control, with a range of 0.93 to 1.3. Factory setting is for a gain of 1.0, thus 10 volts in from the transducer (maximum readable pressure) = 10 volts out from 307 at the factory setting.

(132) — Capacitance Manometer Full-Scale Adjust

This potentiometer controls the full-scale readout of the 307 capacitance manometer display. The control is adjusted at the factory for a full-scale display with an input of 10.0 volts. After zeroing the controller as described above, the 307 may be calibrated to the transducer by adjusting the full-scale adjust pot so the 307 display corresponds to the pressure of the manometer at or near the maximum pressure. This reference pressure may be determined by a certified standard gauge, a dead weight calibration system, or a standard voltage reference. The full-scale adjust pot and the CM analog out full-scale pot do not interact and may be adjusted independently.

9.5 Theory of Operation

Within the capacitance manometer, a diaphragm is distorted by the pressure of the gas in the system under measurement. This diaphragm forms part of a capacitor, and its deflection causes changes in capacitance. Thus, the electrically measured capacitance is a measure of pressure. The device is very sensitive to the elastic properties of the metal of the diaphragm. For this reason, large pressure excursions, such as occur when the system is raised to atmospheric pressure, can cause offsets to the pressure reading. The diaphragm is also extremely sensitive to temperature effects, and although it may be held in a temperature controlled chamber, this temperature control is never perfect, resulting in further perturbations to the devices theoretical accuracy.

Note that these perturbations are inherent in the capacitance manometer design and are not a property of the electronic module used to operate the transducer.

Capacitance manometers are capable of exceptional accuracy, and read pressure independent of gas type, but are also subject to zero-point drift, and must be calibrated at vacuum frequently if high accuracy is to be obtained. Refer to the manual for your transducer for instructions.

9.6 Capacitance Manometer Troubleshooting

Refer to Figure 9-4 on page 103 to locate LEDs on the capacitance manometer circuit board.

Table 9-1 *RS-232 Troubleshooting Guide.*

Symptom	Possible Cause
Unstable reading	Mechanical vibration of capacitance manometer, faulty system ground or cable ground.
Display always reads 0.	Capacitance manometer cable unplugged, no ±15 V power, faulty cable.
Indicator LED (120) on.	-15 V over-current. Defective cable, transducer, or circuit board.
Indicator LED (121) on.	Convectron gauge unplugged.
Indicator LED (122) on.	A/D failure. Defective A/D converter circuit.
Indicator LED (123) on.	+15 V overcurrent. Defective cable, transducer, or circuit board.
Indicator LED (124).	Not used.
Indicator LED (125) on.	Defective PC board, Convectron bridge circuit.
Indicator LED (126) on.	Convectron over-current. Defective gauge or cable.
Indicator LED (127) on.	Microprocessor failure.

9.7 Specifications

See Chapter 3, The Convectron Gauge Module for additional specifications.

Gauge Type	Any capacitance manometer transducer that requires ±15 Vdc power at ≤ 250 mA and outputs 0-10 Vdc proportional to pressure.
Accuracy	0.01% of full-scale (as limited by display resolution).
Display Resolution	Highest 3 decades - 2 digits, lowest decade - 1 digit, scientific notation.
Pressure Range	1, 10, 100, 1000 Torr max heads, 4 decades of pressure.
Display Update Time	Unfiltered: 0.5 sec. typical. Switch selectable filtering: 3 sec. (average of 6 readings).
Output to Head	±15 V ±2% at 250 mA.
Input from Head	0-10 Vdc into 100 Kohm.
Analog Output	5 mA max.
Analog Output Speed	Limited by transducer speed.
Cable Connection	Cable termination is bare tinned wire, user terminates to transducer.

10.1 Introduction

The Linear Analog Output Module provides three, zero to +10 Vdc, linearized voltages that correspond to the displayed pressure readings of the 307 VGC. The source for these outputs is the digital data on the controller's internal bus to the Display Module. The analog output resolution is therefore dependent upon this data. The module is intended to be used in a 307 VGC configured with an ion gauge (top display) and two thermocouples (middle and bottom display). The pressure range for the IG linear output is selected by a front panel switch. Four separate ranges are available.

10.2 Installation

The Module is installed in the controller in the slot normally assigned to the computer interface module.

10.2.1 Electrometer (IG) Range Selection

The purpose of the electrometer linear analog output is to linearize a 3-decade segment of the 0-10 Vdc logarithmic output. The segment selected is determined by the position of the IG range switch on the front panel of the module. One of four ranges may be selected. The range selected will allow linear analog output for pressures from 1 x 10^{-n} to 1 x 10^{-m}. Set the IG range switch, shown in Figure 10-1, to the desired pressure range.

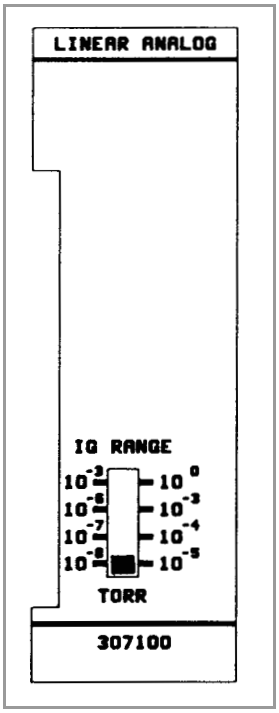

Figure 10-1 *Linear Analog Output Module, Front Panel.*

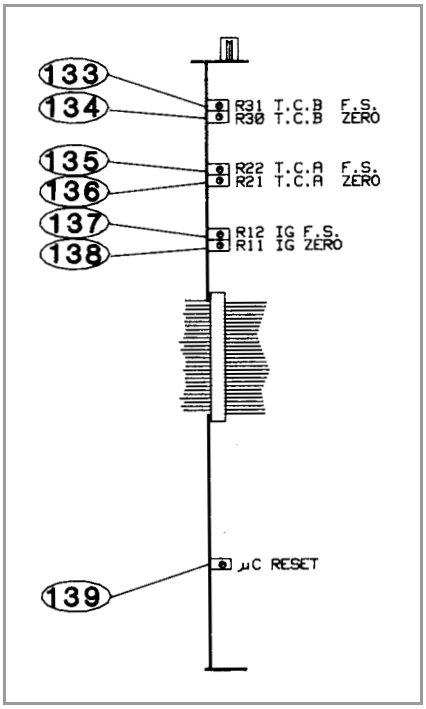

Figure 10-2 *Linear Analog Output Module, Top View.*

10.2.2 Cable Connections

The output is via a "D" type 9-pin connector for which the mating parts have been supplied. The pin assignment for the output connector is defined in Table 10-1:

10.2.3 Pin Assignment

Table 10-1 *Pin Assignments.*

Pin(s)	Function
1, 2, 4, 6 & 8	Ground (both signal and chassis)
3	IG log analog output
5	TC "A" output
7	IG linear output
9	TC "B" output

NOTE: Pin 3 is the logarithmic analog output from the electrometer module. This voltage is proportional to the pressure determined by the IG. Refer to Section 2.3 Operation on page 38 for further details.

10.3 Operation

The Linear Analog Output Module is in operation anytime power is "on". There are no accessible controls or adjustments.

NOTE: During periods where the front panel display is not showing pressure, the analog outputs will lock up at the last valid pressure reading. This includes the period when a process control setpoint is displayed and when emission current or sensitivity is being displayed for the IG channel.

10.4 Calibration

Internal zero and full scale adjustment potentiometers are available for the three analog output channels. Adjustment should be rarely, if ever, required.

Table 10-2 *Adjustment Potentiometers.*

Figure 10-2 Reference	Potentiometer Designator	Function
138	R11	IG zero adjust
137	R12	IG full scale adjust
136	R21	TC "A" zero adjust
135	R22	TC "A" full scale adjust
134	R30	TC "B" zero adjust
133	R31	TC "B" full scale adjust

10.4.1 IG Zero Adjust

To adjust the IG linear output, set the displayed pressure to a reading that gives an analog output equal to 0.100 Vdc for the range selected. For example, on the 10^{-6} to 10^{-3} range set the display for a reading of 1.0 x 10^{-5} Torr. Adjust 138 for an output of exactly 0.100 Vdc.

10.4.2 IG Full Scale Adjust

Set the display to read the maximum pressure for the range selected. For example, set the display to read 1.0 x 10^{-3} Torr for the 10^{-6} to 10^{-3} range. Adjust 137 for an output of exactly 10.0 Vdc.

> *NOTE: It is not necessary to perform the above adjustments each time a new range is selected. Performing the calibration on any range will calibrate the IG linear analog output for all ranges.*

10.4.3 TC Zero Adjust

Set the thermocouple display to read "0" (zero). Adjust T. C. Zero.

(136 for channel A or 134 for channel B) for exactly 0.00 Vdc on the appropriate TC output.

10.4.4 TC Full Scale Adjust

Set the thermocouple display to read 1.0 torr. Adjust T.C. Full Scale (135 for channel A or 133 for channel B) for exactly 10.0 Vdc on the appropriate TC output.

10.5 Theory of Operation

The Linear Analog Output Module circuit consists of an embedded microcontroller and associated circuitry. The microcontroller picks off display data to the display module during the appropriate bus timing cycles and performs a digital-to-analog conversion by using the external circuitry.

10.6 Troubleshooting

Table 10-3 *Troubleshooting Linear Analog Output Module.*

Symptom	Possible Cause
Microcontroller reset LED (139) lit or flashing.	Microcontroller failure.

There are no other user troubleshooting procedures associated with the Linear Analog Output Module. If you are having difficulty with this module, contact Granville-Phillips Customer Service.

10.7 Specifications

Analog output loading: ± 2mA max.

10.7.1 Thermocouple Output

Table 10-4 *Thermocouple Output.*

Pressure Decade Range (torr)	Output Voltage	Smallest Increment	Comment
< 10^{-3} Torr	0 Vdc	-	Zero Vdc output below 1 mT
10^{-3} Torr	10 - 99 mV	1 mV	1 mV = .1 mTorr
10^{-2} Torr	.1 V - .99 V	10 mV	10 mV = 1 mTorr
10^{-1} Torr	1.0 V - 9.9 V	100 mV	100 mV = 10 mTorr
≥ 1 Torr	10.0 V	-	

10.7.2 Electrometer (IG) Output

Table 10-5 *Electrometer (IG) Output.*

Pressure Decade Range (torr)	Output Voltage	Smallest Increment
$< 10^{-3}$	< 10.0 mV	—
10^{-3}	10.0 mV - 99 mV	1.0 mV
10^{-2}	0.1 V - 0.99 V	10.0 mV
10^{-1}	1.0 V - 9.9 V	0.1 V
$\geq 10^{0}$	10.0 V	—
$< 10^{-6}$	< 10.0 mV	—
10^{-6}	10.0 mV - 99 mV	1.0 mV
10^{-5}	0.1 V - 0.99 V	10.0 mV
10^{-4}	1.0 V - 9.9 V	0.1 V
$\geq 10^{-3}$	10.0 V	—
$< 10^{-7}$	< 10.0 mV	—
10^{-7}	10.0 mV - 99 mV	1.0 mV
10^{-6}	0.1 V - 0.99 V	10.0 mV
10^{-5}	1.0 V - 9.9 V	0.1 V
$\geq 10^{-4}$	10.0 V	—
$< 10^{-8}$	< 10.0 mV	—
10^{-8}	10.0 mV - 99 mV	1.0 mV
10^{-7}	0.1 V - 0.99 V	10.0 mV
10^{-6}	1.0 V - 9.9 V	0.1 V
$\geq 10^{-5}$	10.0 V	—

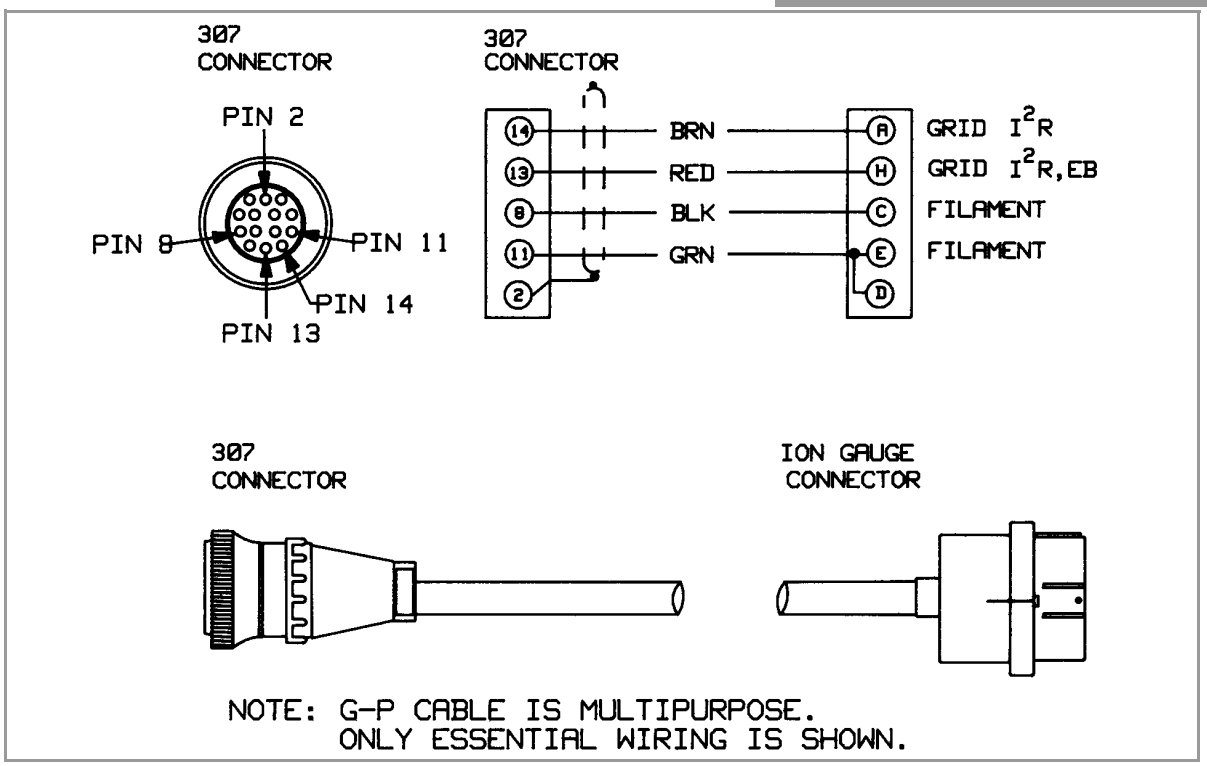

Figure 11-1 *Standard Ion Gauge Cable (See Figure 1-6 on page 1-22)*

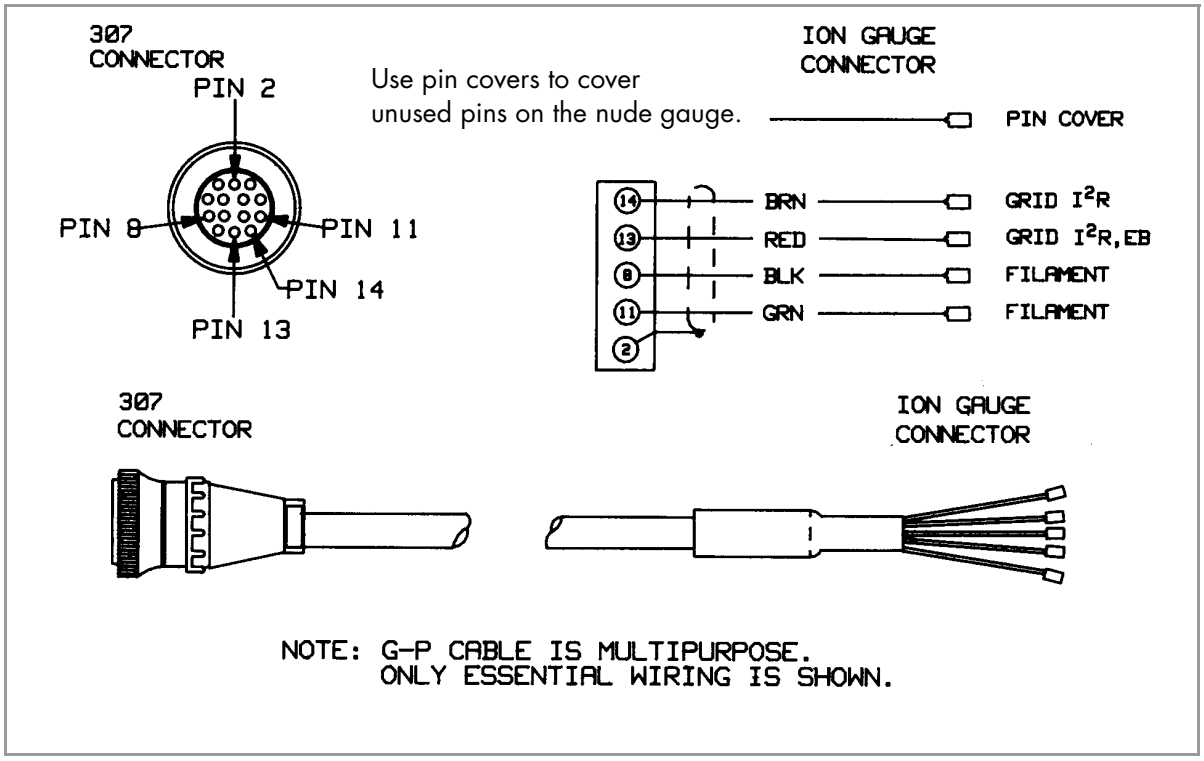

Figure 11-2 *Nude Ion Gauge Cable*

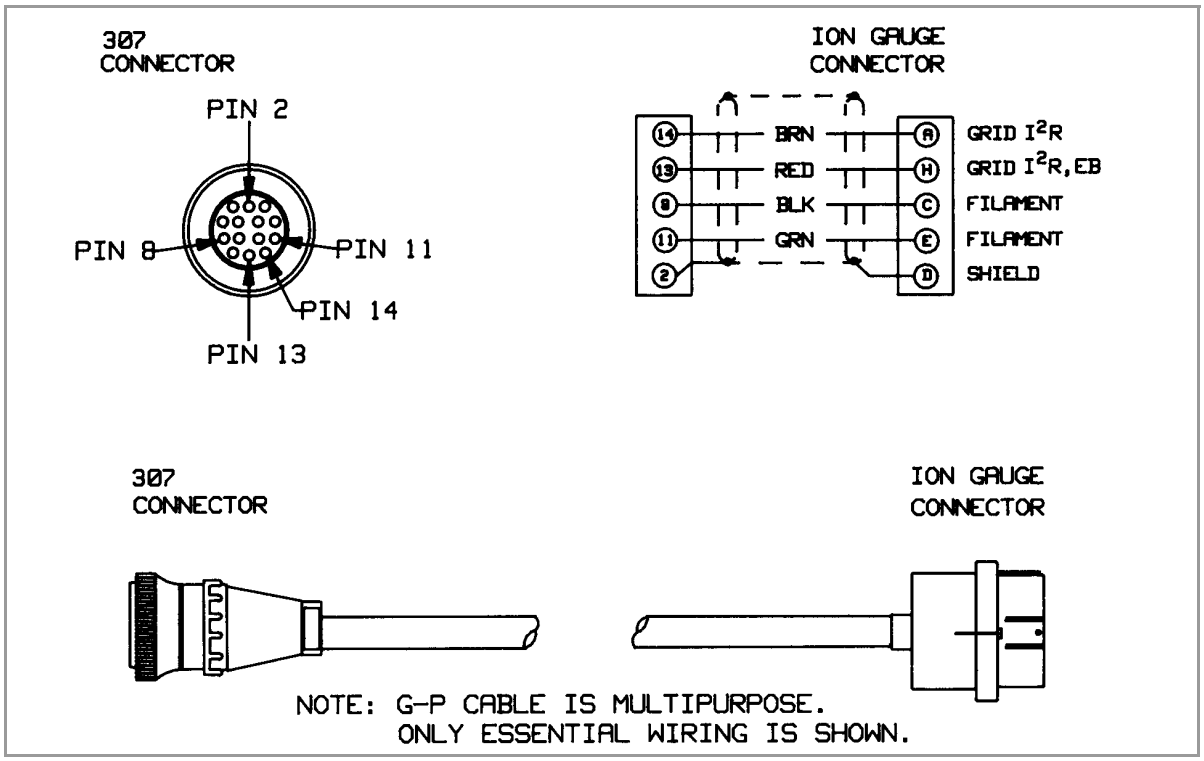

Figure 11-3 *Varian 564 Ion Gauge Cable*

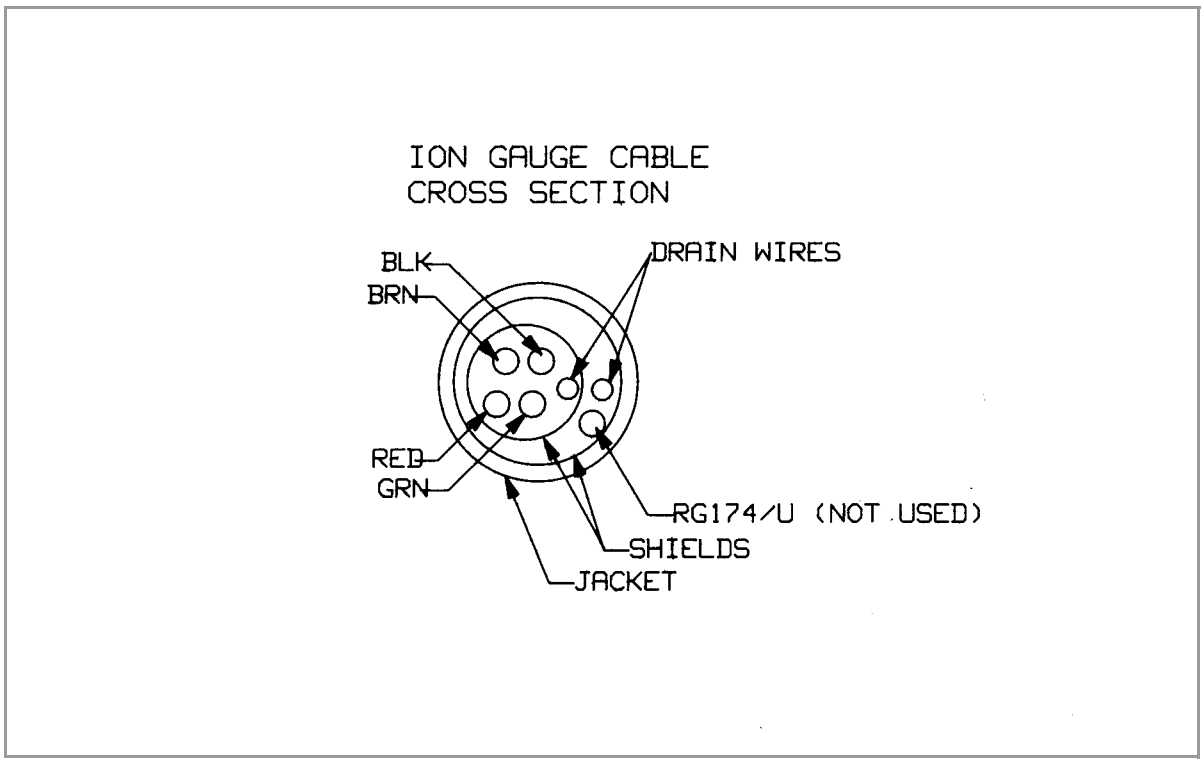

Figure 11-4 *Ion Gauge Cable Cross Section*

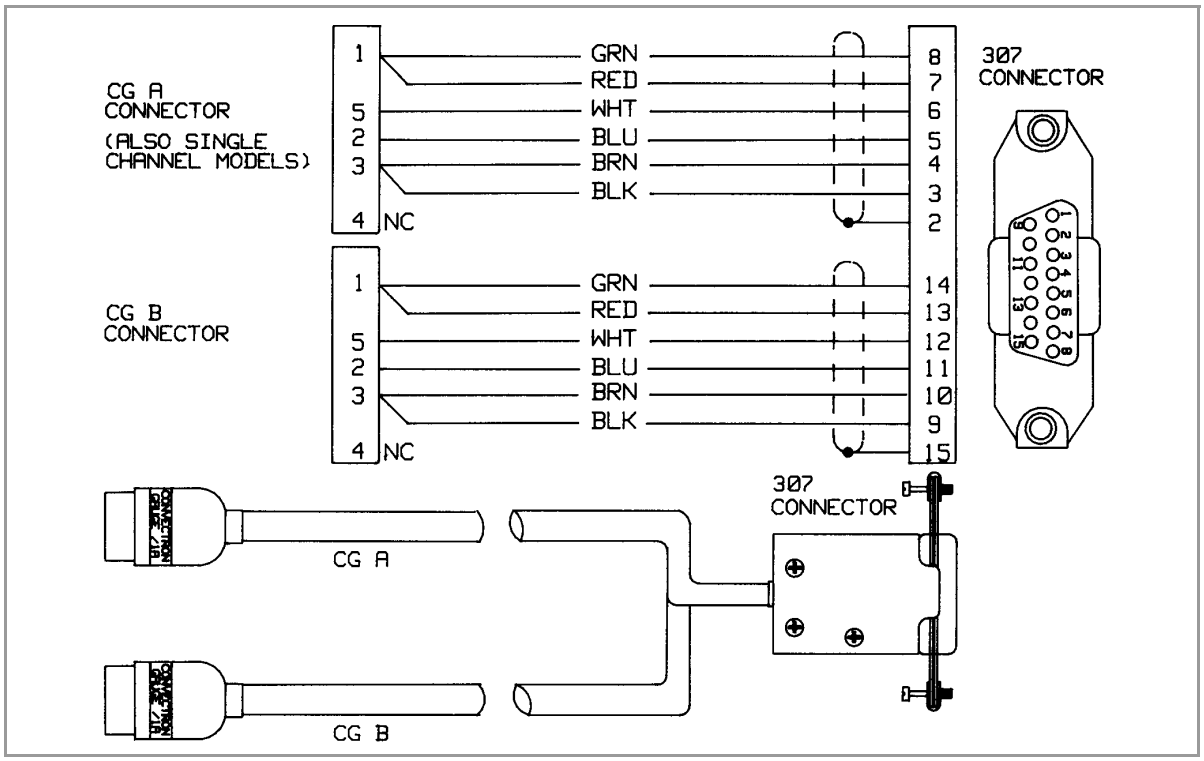

Figure 11-5 *Convectron Gauge Cable*

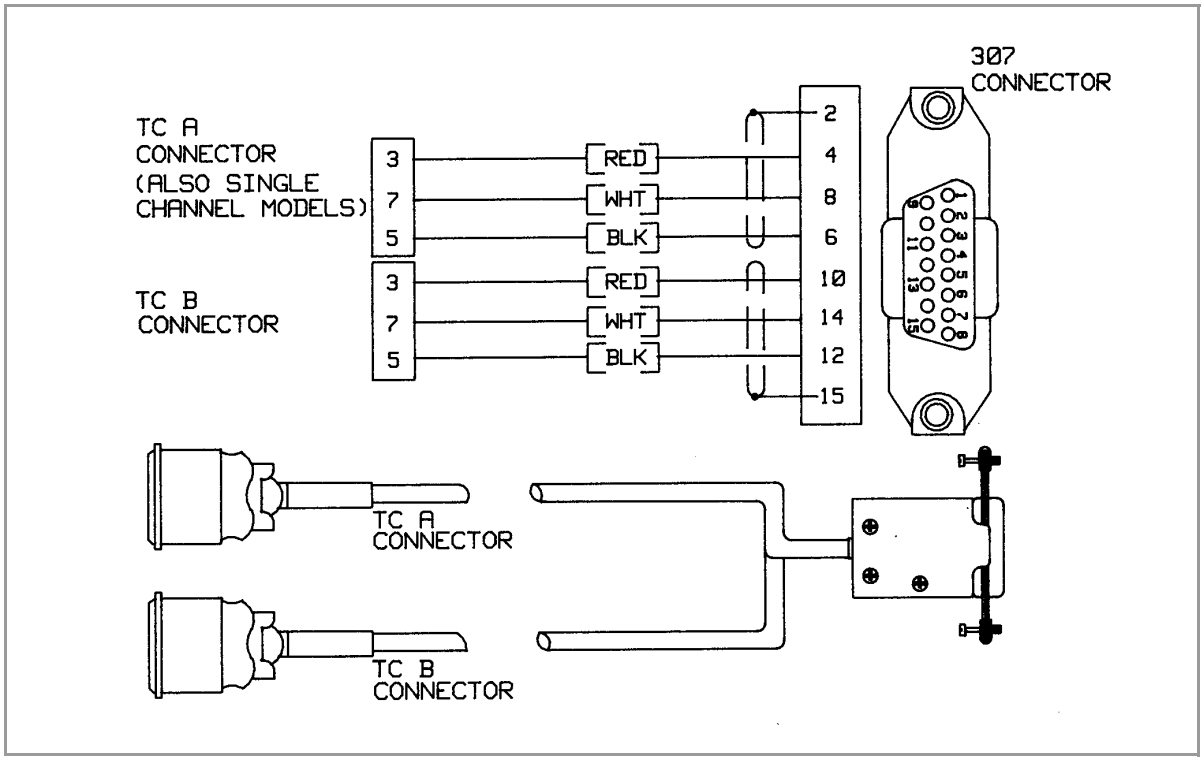

Figure 11-6 *Thermocouple Gauge Cable*

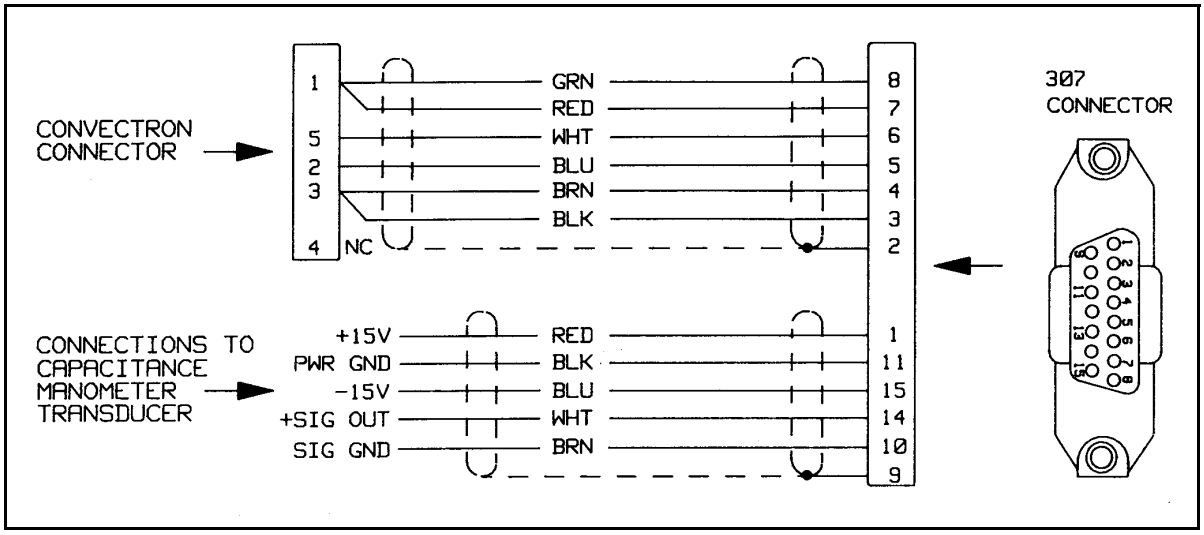

Figure 11-7 *Capacitance Manometer Module Cable*

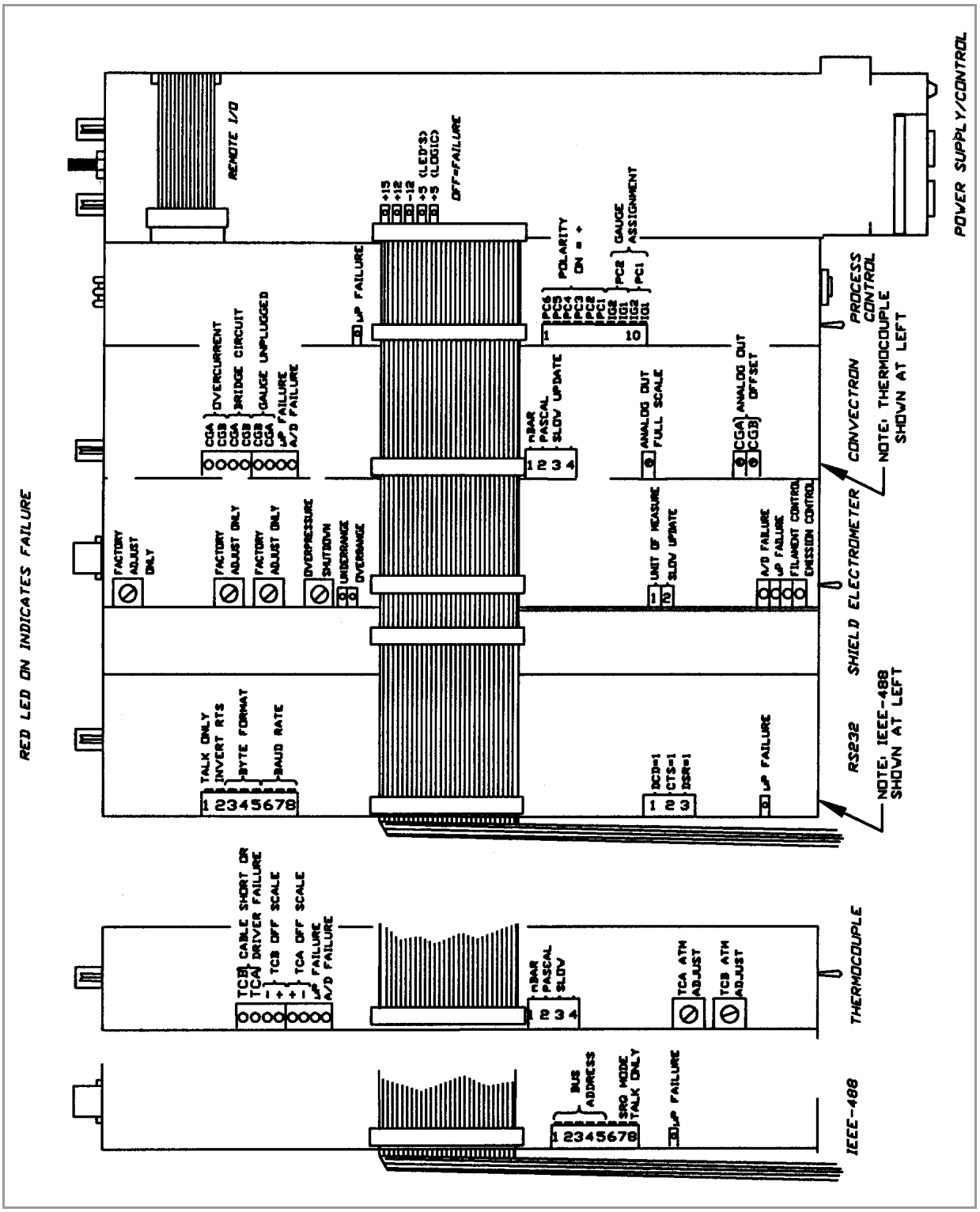

Figure 11-8 Overlay Top Cover.

NOTES

A

analog output **66**
- Convectron gauge module **59**
- Convectron/Capacitance manometer module **103**
- Convectron/Capacitance manometer module full-scale adjust **104**
- ion gauge electrometer module **40**
- Thermocouple gauge module **66**

B

baud rate
- RS-232 interface module **79**

bus structure **30**

byte format, RS-232 interface module **79**

C

cable
- collector cable routing, illustration **23**
- connections **23**
- connections, illustration **23**
- Convectron/Capacitance manometer module installation **102**
- ion gauge cross section, illustration **116**
- Linear analog output module connection **110**
- nude ion gauge, illustration **115**
- standard ion gauge, illustration **22, 115**
- Varian 564 ion gauge, illustration **116**

Cable Diagrams
- Capacitance Manometer **118**
- Controller **119**
- Convectron Gauge **117**
- nude ion gauge cable **115**
- Standard Ion Gauge **115**
- Thermocouple **117**
- Varian Ion Gauge **116**

calibration
- Convectron gauge module **60**
- Convectron/Capacitance manometer module **102, 104**
- general **30**
- ion gauge electrometer module **42**
- Linear analog output module **111**
- Thermocouple gauge module **68**

capacitance manometer module **16**
- cable, illustration **118**

certification, product **12**

character framing
- RS-232 interface module **80**

cleaning
- Convectron gauge module gauge tube **61**

command syntax
- IEEE-488 module **96**
- RS-232 interface module **81**

computer interface **35**
- example **35, 36**

configuration
- capacitance manometer module **16**
- Convectron gauge module **15**
- IEEE-488 computer interface module **16**
- ion gauge (IG) electrometer module **15**
- process control module **16**
- remote input/output module **15**
- RS-232 computer interface module **16**
- RS-485 computer interface module **16**
- Thermocouple gauge (TC) module **16**

connections, cable **23**

control board, illustration **33**

control unit front panel, illustration **27**

Convectron cable, illustration **117**

Convectron gauge module **15**
- 1/8 NPT mount **50**
- analog output **59**
- calibration **60**
- cleaning gauge tube **61**
- description **47**
- display update rate switch **47**
- filament auto turn-on **60**
- front panel, illustration **60**
- gauge tube orientation **49**
- illustration, indicated vs. true pressure curve **53–58**
- indicated vs. true pressure curves **51**
- installation **47**
- installation, precautions **48**
- maintenance **60**
- mounting illustration **49**
- NW16KF flange mount **50**
- operation **50**
- pressure analog output **59**
- reading pressure **50**
- rear panel illustration **59**
- safety instructions **45**
- specifications **64**
- theory of operation **62**
- top view illustration **47, 63**
- transducer test procedure **63**
- troubleshooting **63, 64**
- tube installation **48**
- using below 10^{-3} Torr **50**
- using with gases other than N_2 and air **51**

Convectron gauge module front panel **60**

Convectron/Capacitance manometer module
- analog output **103**
- analog output full-scale adjust **104**
- cable illustration **103**
- cable installation **102**
- calibration **104**
- description **101**
- display update rate switch **102**
- front panel illustration **102**
- full-scale adjust **105**
- installation **101**
- operation **103, 105**
- range switch **102**
- reading pressure **103**
- rear panel illustration **103**
- specifications **106**
- top view illustration **101, 104**
- troubleshooting **105**
- units of measure **101**
- vacuum calibration **102**

D

damage requiring service
- safety **9**

degas
- ion gauge electrometer module power adjustment **40**
- on/off **28**

dip switches

RS-232 interface module **79, 95, 99**
display
printed circuit board, illustration **19**
Process control module **72**
single digit, installation **19**
display update rate switch
Convectron gauge module **47**
Convectron/Capacitance manometer module **102**
ion gauge electrometer module **38**
Thermocouple gauge module **65**

E

electrometer output
Linear analog output module IG **113**
emission adjustment
ion gauge electrometer module **39**
emission range
ion gauge electrometer module **39**
error messages
IEEE-488 module **98**
RS-232 interface module **83**
examples
Convectron gauge module, indicated/true pressure **52**
display pressure **35**
extended capability VGC **35**

F

fault indication **32**
filament auto turn-on
Convectron gauge module **60**
Thermocouple gauge module **67**
filament current limit **30**
front panel
control unit, illustration **27**
Convectron gauge module, illustration **60**
Convectron/Capacitance manometer module, illustration **102**
electrometer module, illustration **38**
Linear analog output module, illustration **109**
Process control module, illustration **73**
Thermocouple gauge module, illustration **67**
full-scale adjust
Convectron/Capacitance manometer module **105**
Linear analog output module IG **111**
Linear analog output module TC **111**

G

gauge tube orientation
Convectron gauge module **49**
grid
bias potential adjustment **30**
voltage adjustment, illustration **30**
ground test **11, 24**

H

handshake line control switches, RS-232 interface module **80**

I

IEEE-488 module
command syntax **96**
computer interface option **16**
description **95**
error messages **98**
installation **95**
interface bus address **95**
operation **96**
specifications **99**
SRQ mode **96**
talk-only mode **96**
top view illustration **95, 99**
troubleshooting **99**
IG zero adjust
Linear analog output module **111**
illustration
307 overlay top cover **119**
cable connections **23**
cable for Varian 564 ion gauge **116**
capacitance manometer module cable **118**
collector cable routing **23**
control board **33**
control unit front panel **27**
Convectron cable **117**
Convectron gauge module mounting **49**
Convectron gauge module rear panel **59**
Convectron gauge module schematic **62**
Convectron gauge module top view **47, 63**
Convectron gauge module, indicated vs. true pressure curve **53–58**
Convectron/Capacitance manometer module cable **103**
Convectron/Capacitance manometer module front panel **102**
Convectron/Capacitance manometer module rear panel **103**
Convectron/Capacitance manometer module top view **101, 104**
correct system grounding **26**
grid voltage adjustment **30**
IEEE-488 module top view **95, 99**
ion gauge cable cross section **116**
ion gauge electrometer module back panel **40**
ion gauge electrometer module, front panel **38**
ion gauge electrometer module, top view **37**
ion gauge schematic **29**
line voltage select jumpers, power supply PC board **17**
Linear analog output module front panel **109**
Linear analog output module top view **109**
module positions **18**
mounting methods **21**
nude ion gauge cable **115**
power supply rear panel **33**
printed circuit board **19**
Process control module front panel **73**
Process control module pin assignments **72**
Process control module relay contacts status **75**
Process control module relay status lights **72**
Process control module top view **74**
remote control connector **29**
remote input/output option **19**
RS-232 interface module top view **80, 85**
standard ion gauge cable **22, 115**
thermocouple gauge cable **117**

Thermocouple gauge module front panel **67**
Thermocouple gauge module pressure analog output **67**
Thermocouple gauge module rear panel **66**
Thermocouple gauge module top view **65, 69**
installation **19**
307 VGC control unit **17**
Convectron gauge module **47, 48**
Convectron gauge module gauge tube orientation **49**
Convectron gauge module precautions **48**
Convectron/Capacitance manometer module **101**
Convectron/Capacitance manometer module cable **102**
display, single digit **19**
IEEE-488 module **95**
ion gauge electrometer module **37**
ionization gauge types **22**
line voltage selection **17**
Linear analog output module **109**
module **17**
mounting configuration **20**
mounting methods, illustration **21**
Process control module **71**
remote input/output module **19**
RS-232 interface module **79**
single digit display **19**
Thermocouple gauge module **65**
Thermocouple gauge module tube **66**
interface bus address
IEEE-488 module **95**
invert RTS switch, RS-232 interface module **81**
ion gauge
assignment, Process control module **74**
cable cross section, illustration **116**
configuration **15**
on/off **27**
schematic, illustration **29**
theory of operation **29**
ion gauge electrometer module
analog output **40**
back panel illustration **40**
calibration **42**
degas on/off **38**
degas power adjustment **40**
display update rate switch **38**
emission adjustment **39**
emission range **39**
front panel illustration **38**
installation **37**
on/off **38**
operation **38**
pressure analog output **41**
relative gas sensitivities **39, 40**
sensitivity adjustment **39**
specifications **44**
top view illustration **37**
troubleshooting **43**
units of measure **37**
ionization gauge types
installation **22**

L

line voltage
select jumpers, power supply PC board, illustration **17**
selection **17**
Linear analog output module
cable connection **110**
calibration **111**
description **109**
electrometer (IG) output **113**
electrometer (IG) range selection **109**
front panel illustration **109**
IG full scale adjust **111**
IG zero adjust **111**
installation **109**
operation **110**
pin assignments **110**
specifications **112**
TC full scale adjust **111**
TC zero adjust **111**
theory of operation **111**
thermocouple output **112**
top view illustration **109**
troubleshooting **112**

M

maintenance
Convectron gauge module **60**
microcontroller **30**
module
calibration **30**
installation **17**
positions, illustration **18**
mounting configuration **20**
mounts
1/8 NPT **50**
NW16KF **50**

N

NW16KF flange mount
Convectron gauge module **50**

O

1/8 NPT mount
Convectron gauge module **50**
on/off
degas **28**
ion gauge electrometer module **38**
toggle key **27**
operation
307 VGC Control unit **27**
Convectron gauge module **50**
Convectron/Capacitance manometer module **103, 105**
IEEE-488 module **96**
ion gauge electrometer module **38**
Linear analog output module **110**
Linear analog output module theory **111**
Process control module **72**
Process control module theory **77**
RS-232 interface module theory **84**
theory of 307 VGC control unit **29**
theory of Convectron gauge module **62**
Thermocouple gauge module **66**

P

pin assignments **28**
Linear analog output module **110**
power on/off toggle key **27**
power supply
307 VGC control unit configuration **15**
rear panel, illustration **33**
pressure
Convectron gauge module, analog output **59**
Convectron gauge module, indicated vs. true curves **51**
Convectron/Capacitance manometer module, reading **103**
reading, Convectron gauge module **50**
Thermocouple gauge module, reading **66**
pressure analog output
ion gauge electrometer module **41**
process control
additional **35**
Process control module
description **71**
front panel illustration **73**

installation **71**
ion gauge assignment **74**
operation **72**
option **16**
pin assignments illustration **72**
relay contacts status illustration **75**
relay polarity setting **74**
relay status lights illustration **72**
setpoint display **72**
specifications **77**
theory of operation **77**
top view illustration **74**
troubleshooting **77**

R

range selection
Linear analog output module **109**
range switch
Convectron/Capacitance manometer module **102**
relative gas sensitivities
ion gauge electrometer module **39, 40**
relay contacts status, Process control module **75**
Relay polarity setting **88**
relay polarity setting
Process control module **74**
relay status lights, Process control module **72**
remote control connector, illustration **29**
remote input/output
option, illustration **19**
remote input/output module **15, 19**
pin assignments **28**
repair order **13, 33**
RS **89**
RS-232 interface module
baud rate **79**
byte format **79**
character framing **80**
command syntax **81**
description **79**
dip switches **79, 95, 99**
error messages **83**
handshake line control switches **80**
installation **79**
invert RTS switch **81**
option **16**
specifications **86**
talk-only mode **80**
theory of operation **84**
top view illustration **80, 85**
troubleshooting **85**
RS-485
Address **87**
Byte Format **88**
Character Framing **88**
Character framing switch settings **88**
Command Syntax **92**
Connecting the Interface **89**
Connectors **90**
Factory Defaults **87**
Installation **87**
Introduction **87**
Preparing for Use **91**
Response Delay **88**
Specifications **90**
Troubleshooting **94**
RS-485 Address **87**
RS-485 interface module
option **16**

S

safety
Convectron gauge module instructions **45**
damage requiring service **9**
instructions **9**
sensitivity adjustment
ion gauge electrometer module **39**
service guidelines **12**
setpoint display
Process control module **72**
single digit display
installation **19**
specifications
307 VGC control unit **34**
Convectron gauge module **64**
Convectron/Capacitance manometer module **106**
IEEE-488 module **99**
ion gauge electrometer module **44**
Linear analog output module **112**
Process control module **77**
RS-232 interface module **86**
Thermocouple gauge module **70**
SRQ mode
IEEE-488 module **96**
standard ion gauge cable, illustration **22, 115**
system ground **11**
system ground test procedure **24**
system grounding, illustration **26**

T

307 VGC control unit
configurations **15**
description **15**
installation **17**
mounting configurations **20**
operation **27**
overlay top cover, illustration **119**
power supply module **15**
specifications **34**
troubleshooting **31**
units of measure **27**
talk-only mode
IEEE-488 module **96**
RS-232 interface module **80**
TC zero adjust
Linear analog output module **111**
theory of operation
307 VGC control unit **29**
Convectron gauge module **62**
ion gauge **29**
Process control module **77**
thermocouple gauge cable, illustration **117**
Thermocouple gauge module **66**
calibration **68**
description **65**
display update rate switch **65**
filament auto turn-on **67**
front panel illustration **67**
installation **65**
operation **66**
option **16**
pressure analog output illustration **67**
reading pressure **66**
rear panel illustration **66**
specifications **70**
top view illustration **65, 69**
troubleshooting **69**
tube installation **66**
units of measure **65**
thermocouple output
Linear analog output module **112**
transducer test procedure, Convectron gauge module **63**
Troubleshooting
RS-485 **94**
troubleshooting
basic 307 VGC **31**
Convectron gauge module **63, 64**
Convectron/Capacitance manometer module **105**
fault indication **32**

IEEE-488 module **99**
ion gauge electrometer module **43**
Linear analog output module **112**
Process control module **77**
RS-232 interface module **85**
Thermocouple gauge module **69**

U

units of measure
307 VGC control unit **27**
Convectron/Capacitance manometer module **101**
ion gauge electrometer module **37**
Thermocouple gauge module **65**

W

warranty **12**

Series 307

Granville-Phillips Series 307 Vacuum Measurement Controller

6450 Dry Creek Parkway
Longmont, CO USA 80503
Phone: 1-303–652–4400

15 Elizabeth Drive
Chelmsford, MA USA 01824
Phone: 1-978–262–2400

Worldwide Customer Service/Support - 24/7
Phone: 1-800-367-4887

To obtain a copy of this instruction manual online, visit our website at *www.brooks.com*
(Adobe® Reader® version 5.0 or higher required)
© 1986-2008 Brooks Automation, Inc.

Instruction Manual

Instruction manual part number 307024
Revision 06 - January 2008