This drawing contains proprietary information of Aquafine Corporation. By accepting this drawing the recipient agrees that this drawing will not be used, reproduced in whole or in part, or its contents revealed to others, except to meet the purposes for which it was delivered. It is understood that no right is conveyed to reproduce or to have reproduced any item herein disclosed without express permission from Aquafine Corporation

REV.	DESCRIPTION	BY	DATE
A5	ECR 1503 RELEASE #5	C.F.	10/11/04
B	ECR 1554	C.F.	11/4/04

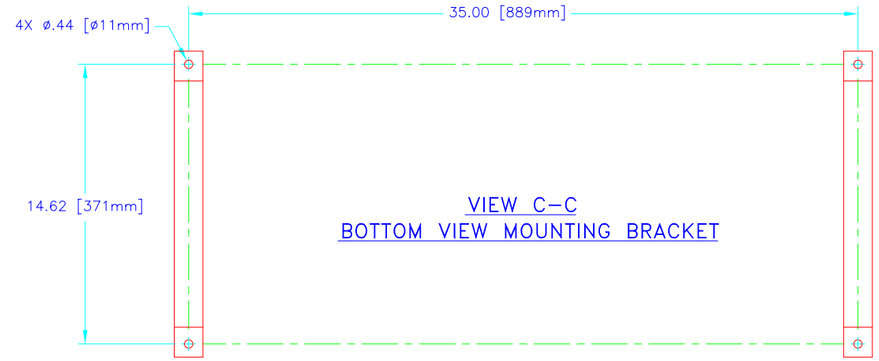

VIEW C–C
BOTTOM VIEW MOUNTING BRACKET

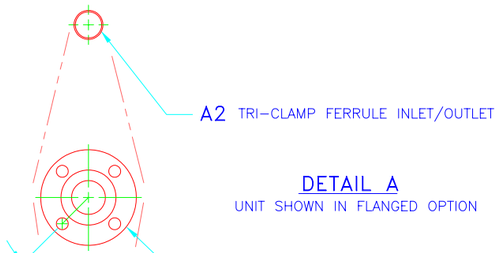

DETAIL A
UNIT SHOWN IN FLANGED OPTION

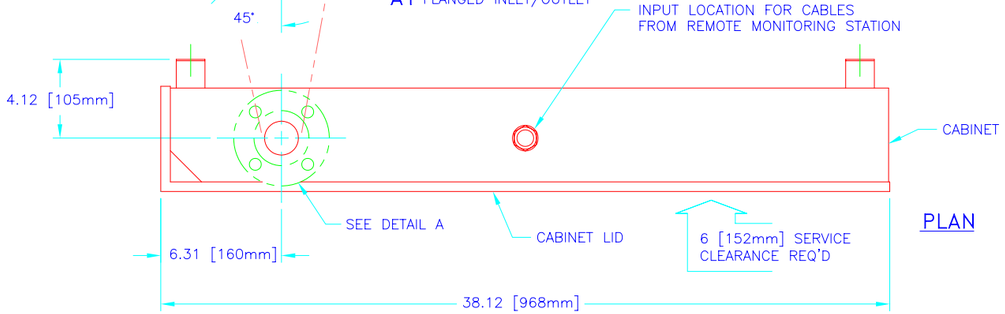

PLAN

REMOTE INTEGRATED MONITORING STATION (OPTION)

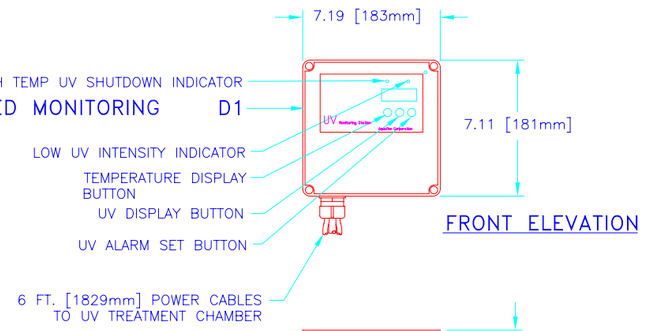

FRONT ELEVATION

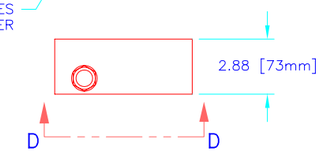

BOTTOM ELEVATION

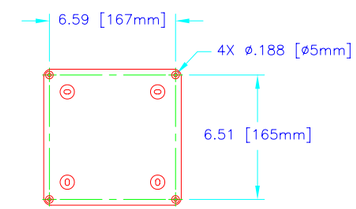

VIEW D–D
BACK VIEW MOUNTING PATTERN

CUSTOMER CONNECTIONS

A1	1–1/2 [38mm] RAISED FACE FLANGE	STANDARD
B1	1/4 NPT SAMPLE PORT COUPLING	OPTIONAL W/ A1
A2	1–1/2 [38mm] TRI–CLAMP FERRULE	OPTIONAL
B2	1/2 [13mm] TRI–CLAMP SAMPLE PORT FERRULE	OPTIONAL W/ A2

OPTIONAL FEATURES

C	RUNNING TIME METER 120V/60HZ OR 240V/50HZ	STANDARD
	RUNNING TIME METER 240V/60HZ	OPTIONAL
D1	INTEGRATED MONITORING STATION & DETECTOR	OPTIONAL
D2	T–120 TEMPERATURE SAFETY CONTROL	OPTIONAL
E	LAMP OUT ALERT	OPTIONAL
F	EPDM O–RINGS	STANDARD
	SILICONE O–RINGS	OPTIONAL
	VITON O–RINGS	OPTIONAL
	CHEMRAZ O–RINGS	OPTIONAL
G	CPVC COMPRESSION NUT	STANDARD
	STAINLESS STEEL COMPRESSION NUT	OPTIONAL
H	DISINFECTION UV LAMP	STANDARD
	VALIDATED DISINFECTION UV LAMP	OPTIONAL
	TOC REDUCTION UV LAMP	OPTIONAL
	VALIDATED TOC REDUCTION UV LAMP	OPTIONAL
	OZONE REDUCTION UV LAMP	OPTIONAL
	VALIDATED OZONE REDUCTION UV LAMP	OPTIONAL

DIMENSION SPECIFICATION

J	FLANGE HEIGHT	20.50 [521mm]
	FERRULE HEIGHT	19.00 [483mm]

UV UNIT

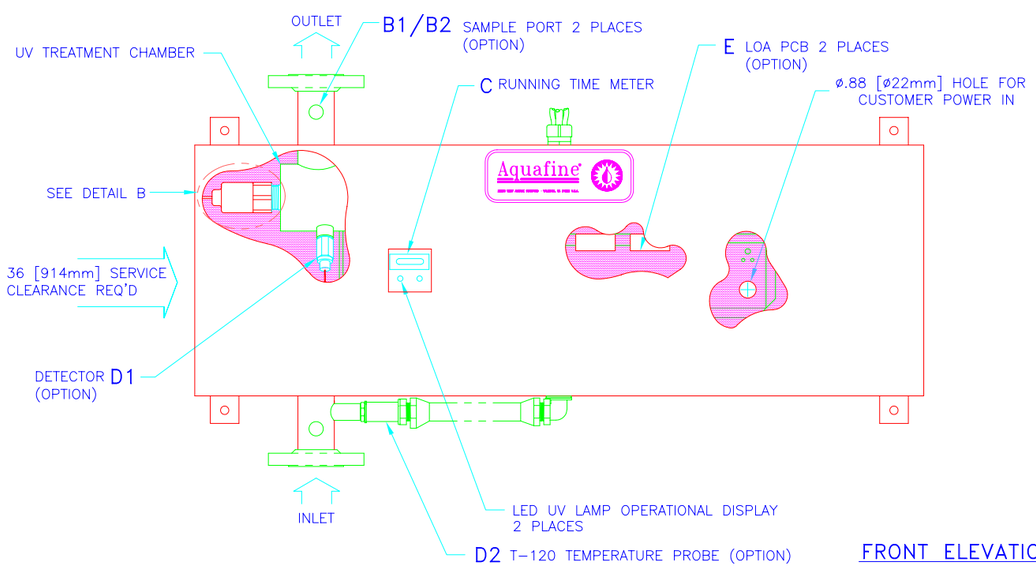

FRONT ELEVATION

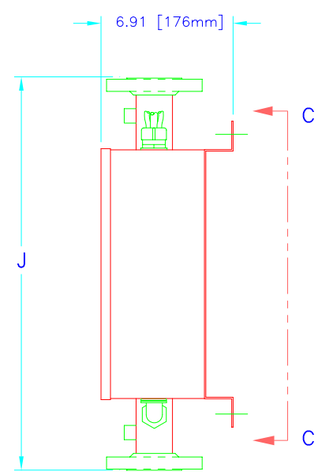

SIDE ELEVATION

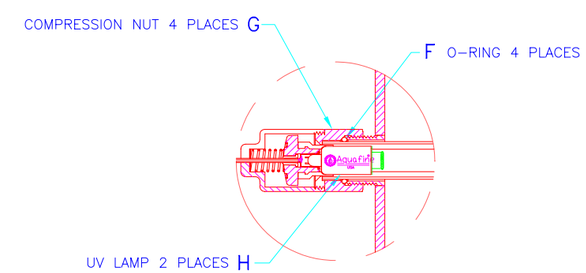

DETAIL B
NOT TO SCALE

DIMENSIONS ARE IN INCHES UNLESS OTHERWISE SPECIFIED DO NOT SCALE DWG.	DRAWN BY FIORELLO	DATE 6/28/04	Aquafine Corporation, 29010 AVENUE PAINE, VALENCIA, CA. 91355–4198 U.S.A.
TOLERANCES UNLESS OTHERWISE SPECIFIED	CHECK	DATE	TITLE GENERAL OUTLINE MP–2–SL
	ENG.	DATE	
FRACTIONS: ± 1/8 DECIMALS: ± .12 ANGLES: ± 1°	APPROVED	DATE	
	SCALE 1/4	SHT 1 OF 1	DWG. NO. GO–41913 REV. B