Remote Vacuum Controller Manual RVC1A (LM69)

LP102011 Rev 1.12
September 2002

As part of our continuous product improvement policy, we are always pleased to receive your comments and suggestions about how we should develop our product range. We believe that the manual is an important part of the product and would welcome your feedback, particularly relating to any omissions or inaccuracies you may discover.

You can send your comments to:-

MKS Instruments Spectra Products
Cowley Way
Weston Road
Crewe, Cheshire
CW1 6AG
United Kingdom

+44 (0) 1270 250150 Tel.
+44 (0) 1270 251939 Fax.

In North America you can send your comments to:-

MKS Instruments Spectra Products
380 Woodview Ave.
Morgan Hill
CA 95037
USA

(408) 778-6060 Office
(408) 776-8575 Fax
1-800-VAC CHECK

Windows and Windows 95 are trademarks of the Microsoft Corporation.
All other brand or product names are trademarks or registered trademarks of their respective companies.

Contents

Errata and addenda ..... **a**

Section 1. Introduction **1**

Section 2. Technical information..... **5**

2.1. Introduction 5

2.1.1. Safety.....5
2.1.2. Hazard warning labels.....5

2.2. Specifications 6

2.2.1. Mechanical 6
2.2.2. Electrical 6
2.2.3. Environmental conditions 7
2.2.4. Ventilation 7

2.3. Hardware interface 7

2.3.1. Switches 7
2.3.2. Indicators.....8
2.3.3. Connections.....9
2.3.4. Fuses.....10

2.4. RVC1A features 10

2.4.1. Turbo pump speed.....10
2.4.2. Bakeout heater.....11
2.4.3. Cool down 11
2.4.4. Interlocks.....11
2.4.5. Alarm output 12
2.4.6. Pumpdown.....13

Section 3. RVC software..... **17**

3.1. Getting started 17

3.1.1. RVC window.....18

3.2. Operating modes.....18

3.2.1. Manual mode 18
3.2.2. Automatic mode 19
3.2.3. Maintenance mode 19

3.3. Interlocks 20

3.3.1. Lo Vac Ok 20
3.3.2. Pressure OK 21

3.4. RVC controls 22

3.4.1. Pumps on/off 22
3.4.2. Pump timer 23
3.4.3. Filament on/off 23
3.4.4. Sampling valve 23
3.4.5. By-pass valve 24
3.4.6. Heater 24

Section 4. Installation details **27**

4.1. Connector pin outs 28

4.1.1. Skt1 Valve output 28
4.1.2. J5 System inputs 28
4.1.3. Backing pump Skt C 29
4.1.4. Bakeout power 29

4.2. Connecting vacuum pumps 30

4.2.1. Direct energisation 30
4.2.2. Slave relay energisation 32

4.3. Interfacing to the Hi-Vac and Lo-Vac gauges 34

4.4. Control interface for turbo pump 35

4.5. Internal settings 37

Appendix 1 Health and safety clearance form **39**

Errata and addenda

Rev 1.11 16 Oct 2000
MKS name change only.

Rev 1.12 09 Sep 2002
Document reviewed.

EC DECLARATION OF CONFORMITY

Spectra SensorTech Ltd.
Cowley Way
Crewe
Cheshire
CW1 6AG
United Kingdom

DECLARES THAT THE FOLLOWING PRODUCTS:

LM56 MICROVISION
LM61, LM10, LM4, LM9 SATELLITE 100, 200, 300
LM62, LM10 VACSCAN 100
LM63, LM10, LM4 VACSCAN PLUS 100, 200
LM69 RVC 1a
LM70, LM76 MICROVISION PLUS
LM77 VISION 1000P
LM78 VAC CHECK
LM79 VISION 1000I
LM80 MINILAB
LM89 VISION 1000B
LM90 VISION 1000 C / E
LM92 MICROVISION IP
LM98 e-Vision
LM102 e-Vision+

ARE IN CONFORMITY WITH THE FOLLOWING EUROPEAN DIRECTIVES:

89/336/EEC ELECTROMAGNETIC COMPATIBILITY DIRECTIVE
73/23/EEC LOW VOLTAGE DIRECTIVE AS AMMENDED 93/68 EEC

THE APPLICABLE STANDARDS ARE:
EN 61326:2001 ELECTRICAL EQUIPMENT FOR MEASUREMENT, CONTROL & LABORATORY USE
EN 61010-1:2001 SAFETY REQUIREMENTS FOR ELECTRICAL EQUIPMENT FOR MEASUREMENT, CONTROL & LABORATRY USE.

SIGNED:

T.R.ROBINSON
EUROPEAN OPERATIONS MANAGER
DATE: 1ST JULY 2001

Additional Installation Maintenance and Operating Instructions

In order to comply with European regulations, the following procedures must be followed:-

A) INSTALLATION

1) The installation procedures given in the operating and technical manuals must be followed, in addition to these instructions.
2) The mains power cable must conform to local regulations and must have a protective earth (PE) conductor securely connected to the power plug protective earth contact.
3) The short earthing braid supplied with some products must be fitted between the terminal on the RF head and one of the CF40 vacuum flange bolts.
4) Only cables supplied with the equipment may be used for interconnections. If extension cables are required to obtain a greater separation between control unit and RF head, or if longer serial communications cables are required, they must be supplied by Spectra SensorTech Ltd.
5) Cables attached to all other ancillary signal and control ports must have a length of less than 3 metres. If greater length is required, Spectra SensorTech Ltd must be contacted for technical guidance on possible EMC and safety issues.
6) The vacuum system on which the analyser/RF head is mounted must be earthed, to a protective earth, preferably to the same protective earth as the control unit.

B) OPERATION

1) The equipment is not authorised for use as a critical component in a life support or safety critical system without the express written approval of Spectra SensorTech Ltd.
2) All instructions given in the operating manual must be followed.
3) Adjustments are strictly limited to those accessible from the control panel and computer keyboard and only when running software supplied by Spectra SensorTech Ltd.

C) MAINTENANCE

WARNING-DANGEROUS VOLTAGES EXIST INSIDE THE EQUIPMENT

1) Maintenance functions must only be carried out by competent persons.
2) During the warranty period, faulty equipment must be returned to Spectra SensorTech Ltd., unless special arrangements are made.

3) There are no user replaceable parts in the electronic equipment. Certain components are EMC and safety critical and must not be substituted. Replacement parts are available from Spectra SensorTech Ltd.
4) Equipment enclosures embody certain special fastening and bonding devices that affect EMC and safety performance. These must be correctly re-fitted after servicing.

Section 1.
Introduction

In many applications, the residual gas analyzer is required to monitor gases in vacuum systems which are run at higher pressures than those in which the quadrupole analyzer can operate. This is often the case in vacuum process systems such as sputter chambers, vapor deposition and other thin film deposition processes. In these circumstances, the quadrupole analyzer is housed in its own vacuum chamber backed by a small, independent pumping system. Gas from the main process chamber is introduced to the quadrupole via a suitable inlet. This system is often referred to as a High Pressure Adapter (HPA). The Remote Vacuum Controller, or RVC, is designed to control the HPA's pumping and inlet system either automatically or manually, from the RGA control unit. It is designed to give protection to the process chamber by preventing accidental exposure to harmful conditions. The controller also protects the quadrupole by interlocking the filament and multiplier operation with the pump down and venting of the system.

The RVC was originally designed to connect to control units used in Multiquad and Black Box Multiquad systems. With the advent of the RGA for Windows software package, the RVC's capabilities were increased to operate in these systems. The RVC1A represents a further advance in the control of HPA systems.

The RVC1A is specifically designed to operate in systems using Microvision Plus RGA's and the Process Eye software package (version 1.60 or greater). The RVC1A cannot be used in Microvision or Satellite based systems, nor can it be used with RGA for Windows software or any earlier Spectra systems. This manual covers the hardware aspects of the RVC1A, details of the accompanying software features can be found in the Process Eye manual.

The vast majority of RVC1A's are sold as part of a fully integrated package and the customer does not need to be concerned with connections to the unit. For users who are building or modifying their own system to incorporate an RVC1A full configuration and connection details are given in section 3.

A variety of High Pressure Adapter configurations are required to meet the needs of various applications and the RVC1A has a degree of flexibility allowing it to be configured for various systems. Primarily it will be used to operate with systems using one or two inlet valves used in PVD systems. Below is a general description of a typical installation.

The quadrupole analyzer is housed in a small chamber, which is evacuated by a turbo molecular pump backed by a dry diaphragm pump or two stage rotary vane pump. The RVC1A is designed to operate with a Balzers turbo but some other types may be used, your local MKS Spectra facility can advise you on this. The mains power supply for these two pumps, and hence whether they are on or off, is controlled by the RVC1A. The speed of the turbo pump is monitored by the RVC1A via a speed signal taken from the turbo pump controller. 95% of full speed is the threshold that interests us, at this point the RVC1A takes the turbo to be up to speed.

CAUTION

DO NOT INTERCHANGE TURBO PUMP CONTROLLERS BETWEEN RVC AND NON-RVC SYSTEMS

Please note that in order to acquire the turbo pump at speed signal, the turbo pump controller may have been modified, in which case an un-modified turbo pump controller must not be used in the RVC1A system. The Balzers TCP015 controller is not modified in any way. If you need to swap other models of turbo controller please contact your local MKS Spectra facility for advice first.

The HPA has to have some method of introducing gas into the quadrupole chamber, this is achieved by fitting one or two valves. The number and type is governed by the application and the pressure regimes, which are to be monitored. Generally, the valves are electro-pneumatic. The pneumatic valve is operated by compressed air at approximately 60psi. The compressed air is controlled by a 24V DC solenoid valve, which is opened and closed by an output from the RVC1A.

A high conductance valve is used to expose the quadrupole to the process chamber without any pressure reduction, usually this would only be opened when the process chamber is at a pressure of $1x10^{-2}$ Torr for instruments fitted with a PVD ion source or less and is used when leak checking and baselining. For an RGA fitted with an open ion source the pressure limit is $1x10^{-4}$ Torr.

A bypass line can be added to the high conductance valve, which would incorporate a fixed molecular leak. This bypass line connects the inlet side of the high conductance valve to the outlet side. A fixed leak is built into the shut off valve's fitting. The fixed leak is chosen to suit the pressure regime to be sampled, which is usually in the range of 1 to $2x10^{-2}$ Torr.

The Remote Vacuum Controller has three operating modes; automatic, manual and maintenance. The maintenance mode, is entered by switching the INTERLOCKS key switch on the front panel of the RVC1A to the OFF position. In this mode, none of the interlocks are active, therefore there is no protection for either the process chamber or the quadrupole analyzer. Under normal circumstances, this mode should not be used. The key switch should be switched to the on position and the key should be removed.

To operate in the manual and automatic modes two interlock signals are required (one signal in systems using one valve). These should come from independent total pressure gauges monitoring the process chamber or from the process control system. The first interlock signal is the Low Vacuum Ok signal and this would be set for the highest pressure that the inlet system has been designed to operate at. With the most common inlet configuration, the high conductance inlet with single by-pass, when the Low Vacuum Ok signal goes true the by-pass valve may be opened but the high conductance valve remains closed. The second interlock signal is High Vacuum Ok, when this goes true the high conductance valve may be opened.

In the manual operating mode the inlet valves are opened by a control the user activates, providing the interlocks are all true the valve will be opened. In the automatic mode the appropriate valve will be opened as soon as the interlock conditions are true without the user having to do anything.

That concludes the brief introduction to the Remote Vacuum Controller a more detailed description of the various features can be found in later sections.

This page is deliberately left blank.

Section 2.
Technical information

2.1. Introduction

The Remote Vacuum Controller is designed for controlling and monitoring a particular configuration of vacuum system, with some variations allowed. This section of the manual gives technical information and a description of RVC1A features for the users of systems fitted with the unit. If you are incorporating an RVC1A unit into a complete system you should use this section in conjunction with the detailed information provided in section 3.

2.1.1. Safety

WARNING

The Yellow/Green core of the power cord must be connected to the power source protective earth terminal.

Do not position the unit so that it is difficult to unplug the mains power cord.

There are no Operator serviceable parts within this unit.

2.1.2. Hazard warning labels

External:

The Electric Shock (ISO 3864, No.B.3.6) symbol placed on the top cover refers to the risk of Electric shock from Hazardous voltages if the covers are removed.

The Exclamation Mark (ISO 3864, No.B.3.1) on the rear panel relates to Mains input and fuses specifications. See Section 2.2.2 Elecrical..

2.2. Specifications

2.2.1. Mechanical

Euro rack plug in unit to DIN 41494 part 5. Size, 3U x 21HP.

Dimensions: Front panel height 128.4mm. Width 106.3mm. Depth, 372mm including 80mm allowance for connector clearance at the rear of the unit.

Weight: 3Kg.

2.2.2. Electrical

Power input: 100 - 120V or 220 - 240V ac 47 - 63Hz. 2.6kVA

European Fuses: 220-240V. 5mm x 20mm High Breaking Capacity (HBC) manufactured in accordance with IEC127.

U.S.A & Canada Fuses: 110-120V. 1¼ x ¼ High Breaking Capacity (HBC) manufactured in accordance with U.L

Installation category (overvoltage category) II to IEC664.
Insulation Class I to IEC536

Fuse	Location	Circuit	230v Rating	110V Rating
FS1	Next to cables	Mains inlet	6.3AT, EC127	10AT, UL
FS2	Next to panel edge	Backing Pump	3.15AT, IEC127	8AT, UL

* SAFETY * REPLACEMENT FUSES MUST BE OF THE SAME TYPE AND RATING.

2.2.3. Environmental conditions

For indoor use only
Enclosure IP20 to EN60529

Altitude:	Up to 2000 m
Temperature range:	5°C to 40°C
Relative Humidity:	80% up to 31°C decreasing linearly to 50% at 40°C operating and storage
Mains supply voltage:	Fluctuations not to exceed ± 10% of nominal voltage
Pollution Degree:	2 to EN61010-1
Installation category:	II

2.2.4. Ventilation

The openings in the top and bottom panels must not be obstructed. Allow a minimum clearance of 50mm all round.
Do not exceed the maximum operating ambient temperature.

2.3. Hardware interface

2.3.1. Switches

All of the switches are mounted on the front panel of the RVC1A.

Interlocks The INTERLOCKS switch is the key switch mounted on the front panel of the RVC1A. In the OFF position the interlocks will be disabled and the unit will be in the maintenance mode. Normally the interlocks switch will be in the ON position with the key removed.

Power Switches power to the RVC1A and all peripheral devices.

Bake A momentary action push button switch on the front panel labeled BAKE. Pressing this switch will switch the bakeout heater on if it is off or off if it is already on.

Pumps A momentary action push button switch on the front panel labeled PUMPS. Pressing this switch will switch the pumps

on if they are off or off if they are on. The PUMPS switch enables the pumps to be switched on and off without the Microvision Plus being connected.

RGA Reset A recessed push button switch. This should not be used.

2.3.2. Indicators

All of the indicators are mounted on the left hand side of the RVC1A front panel.

Power on The green LED labeled **POWER ON** fitted on the front panel of the RVC1A, is illuminated when power is supplied to the unit and the 24V DC supply has been established.

Alarm The red LED labeled **ALARM** fitted on the front panel of the RVC1A, is illuminated when the Microvision Plus activates the RVC1A alarm output.

Pumps on The green **PUMPS ON** LED, is illuminated when the pumps are switched on either by the Microvision Plus through the Process Eye software or the PUMPS switch on the RVC1A.

Turbo ready The green **TURBO READY** LED, is illuminated when the turbo pump has reached 95% of full speed.

Bake The amber LED labeled **BAKE** is illuminated when the Bakeout heater is switched on either by the Microvision Plus through the Process Eye software or the BAKE switch on the front panel of the RVC1A.

Cool down The amber LED labeled **COOL DOWN,** is illuminated during the Cool Down period as described in section **2.4.3. Cool down**.

RGA Ok The green **RGA OK** LED, is illuminated when the Microvision Plus signals that it is operating with the filament ON.

Status 1 The **STATUS 1** LED is illuminated when the status 1 input is active which is required to open either inlet valve.

Status 2 The **STATUS 2** LED is illuminated when the status 2 input is active which is required to open the by-pass valve.

2.3.3. Connections

All the RVC1A connectors are mounted on the rear panel of the unit or are fitted to "flying-leads" which emerge from the rear panel. The following list describes each connector.

The connectors must only be used for the purposes described below.

Microvision control cable:
A 25 way cable, 6 feet (2 meters approx.) long and terminated with a 25 way D-Type plug which connects, usually via an extension cable, to the DIGITAL I/O socket on the rear panel of the Microvision Plus.

Microvision power supply:
A 15 way cable 4 feet (1.4 meters approx.) and terminated with a 15 way D-Type socket to supply 24V DC power, usually via an extension cable, to the Microvision Plus.

Backing pump power (Skt C):
Mains cable 6 feet (2 meters approx.) long terminated with a 4 pin twist lock socket to supply mains power usually via an extension cable to the backing pump.

Turbo pump power (Skt A):
Mains cable 1 foot (.3 meters approx.) long terminated with an I.E.C. mains socket to supply mains power to the turbo pump controller.

Bakeout power:
Mains cable 5 feet (1.7 meters approx.) long terminated with a twist lock socket to supply power via an extension cable to a Bakeout jacket.

Mains inlet: The mains supply to the RVC1A is via an I.E.C. panel mounted mains plug.

Interface socket (J5):

26 way High Density D type socket. Inputs; Hi-vac, Lo-vac open collector TTL or relay contact closure, Turbo speed 0 to 10V for 0 to 100% speed. See section 3 for further details.

Valve output (Skt 1):

15 way D type socket. Eight 24V DC drive outputs. Max. current drive 350mA (each port) and 1.2A max. in total. See section 3 for further details.

2.3.4. Fuses

There are two fuses mounted on the rear panel of the RVC1A. There is a fuse rating label, also refer to section **2.2.2. Electrical.**

FS1	Main RVC1A fuse
FS2	Pumps Fuse

2.4. RVC1A features

The following sections describe some of the facilities provided by the RVC1A, how they operate and when they should be used.

2.4.1. Turbo pump speed

The turbo pump speed is used as a basic method of determining whether the vacuum is good enough to allow the quadrupole analyzer to be operated, in particular whether it is safe to switch on a filament. 95% of the turbo pump's full speed is taken to be up to speed. At this level it can be assumed to the vacuum is good enough to switch on a filament without the risk of burning it out. From passed experience this has proved to be a highly reliable method of monitoring the basic vacuum conditions. Certainly if there is a large air leak, the backing pump has not started, the turbo pump has stalled or there is some obstruction in the backing line the turbo pump will not reach 95% full speed.

A small range of set-point adjustment is provided by trimpot R118 which is accessible through the bottom grill of the RVC1A. This trimpot is factory

pre-set and should be adjusted only if a particular turbo controller is failing to reach the standard set-point. If pump speed falls by 2% below the set-point the signal is turned back off.

2.4.2. Bakeout heater

The Bakeout Heater facility is used to bake the vacuum system. The bake cycle is controlled by the Microvision Plus or the internal logic in the RVC1A, refer to the flow chart at the end of this section.

2.4.3. Cool down

This is a time period which allows the vacuum system time to cool down before using the RGA following a bake out.

2.4.4. Interlocks

The RVC1A requires two interlock signals, which will come from an independent total pressure gauge, pressure switches or the process control system.

The first signal is the Status 1 signal. The Low Vacuum level will be the normal maximum process operating pressure, usually between $1x10^{-2}$ and $1x10^{-4}$ mBar, which will determine the size of the leak or setting of the metering valve in the by-pass. Once the pressure falls below the Low Vacuum level the Lo Vac Ok signal is set true and the valve in the by-pass line may be opened providing the other interlock conditions are satisfied.

The connection of the Low Vacuum signal is described in section **4.3. Interfacing to the Hi-Vac and Lo-Vac gauges**. It is designed to accept a variety of types of signal (no volts relay contact, open collector TTL drive, TTL totem pole drive) and the RVC1A circuitry is identical to the Hi Vac Ok input.

The second signal is the Hi Vac Ok signal. The High Vacuum level is usually set to the maximum operating pressure for the quadrupole analyzer, about
$1x10^{-5}$ mBar, although this will vary depending on the ion source type. Once

the pressure drops below the High Vacuum level the Hi Vac Ok signal is set true. The high conductance valve may now be opened, providing the other interlock conditions are satisfied.

Connection of the High Vacuum signal is described in section **4.3. Interfacing to the Hi-Vac and Lo-Vac gauges**. It is designed to accept a variety of types of signal (no volts relay contact, open collector TTL drive, TTL totem pole drive) and the RVC1A circuitry is identical to the Lo Vac Ok input.

The other interlocks are internal to the complete RGA systems. Before either the high conductance valve or the by-pass valve can be opened one of the RGA's filaments must be on and the emission must be correct. The turbo pump must be on and up to speed (95% of full speed is taken as up to speed) before the RGA filament may be switched on and hence either inlet valve opened.

The table below summaries the interlock conditions used in the manual and automatic modes. The required state is only reached when all the conditions are satisfied.

Required State	**Conditions**
Filament On	Main Pumps On and up to speed No filament trips *
By-Pass Valve Open	Main Pumps On and up to speed Filament On Lo Vac Ok
High Conductance Valve Open	Main Pumps On and up to speed Filament On Lo Vac Ok Hi Vac Ok

* Filament trips include X-Trip, P-Trip and T-Trip refer to your RGA manual for details about these.

2.4.5. Alarm output

The alarm output is used to "interlock" the process to the RGA system. It is available as a Form C relay contact and as an open collector output.

2.4.6. Pumpdown

Pumpdown is an automatic cycle controlled by the Microvision Plus or internal logic in the RVC1A. The flowchart below details the pumpdown cycle.

PUMP DOWN CYCLE FLOW CHART

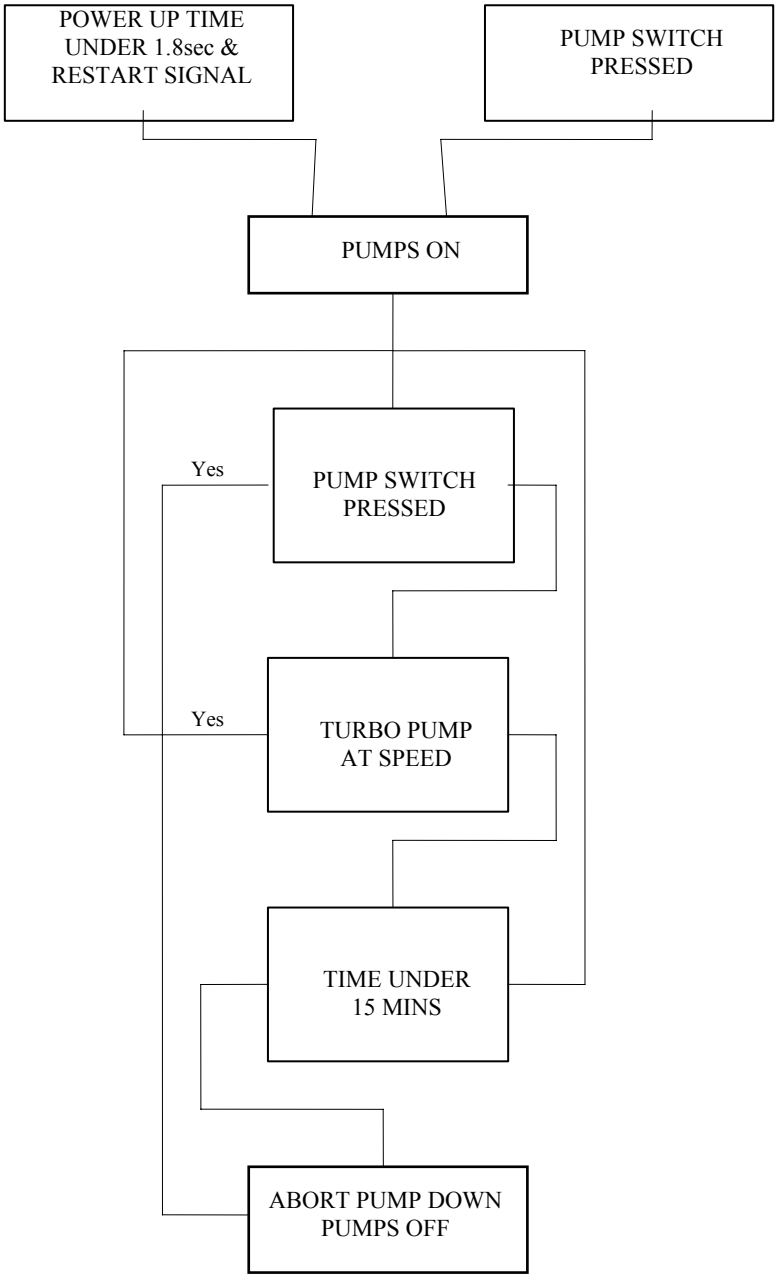

BAKE CYCLE FLOW CHART

Tmax = MAX BAKE TIME
selectable 8 or 66 hours

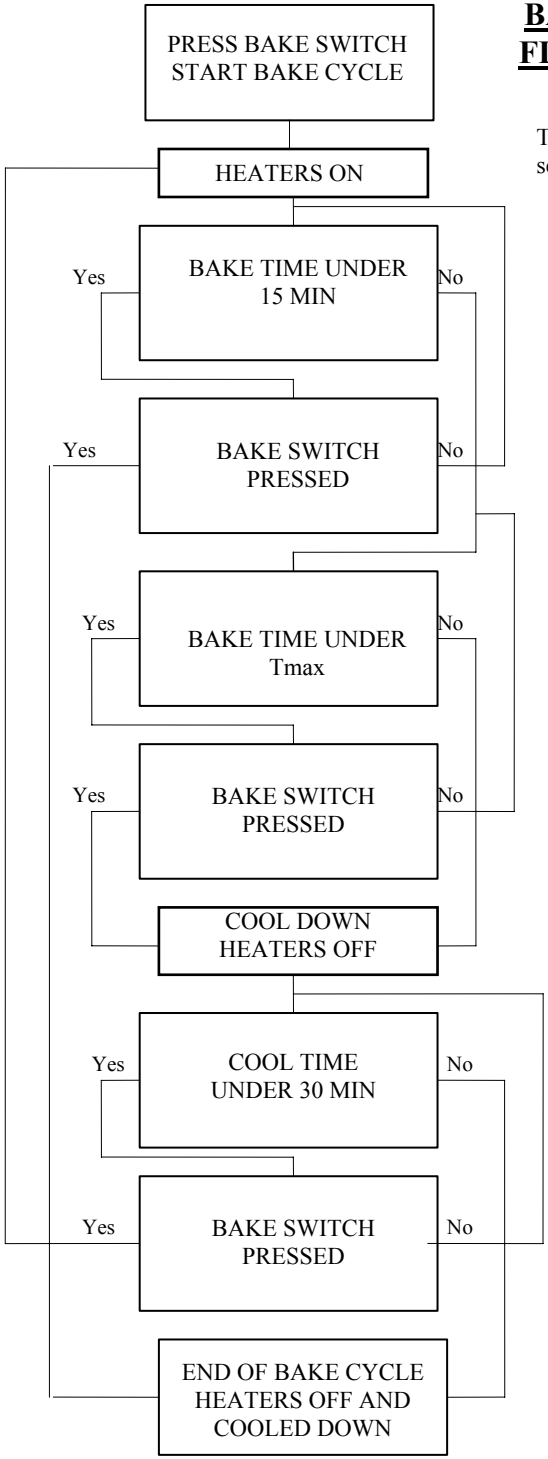

Section 3.
RVC software

3.1. Getting started

The remote vacuum controller is connected to the Aux. I/O connector on the Microvision Plus which is read when the Microvision Plus is first switched on. If there is an RVC connected it is recognized along with the type of vacuum system for which the RVC is configured. None of the RVC controls will be available to the user unless an RVC is connected to the control unit and the control unit has been powered up with the RVC connected.

If an RVC1A is connected to the Microvision Plus the Remote Vacuum Controller window will be displayed on top of the Mode Select screen. The exact details of the vacuum schematic will vary depending on the vacuum system and the configuration of the RVC1A. There are two possible configurations single valve or dual high conductance with by-pass valve.

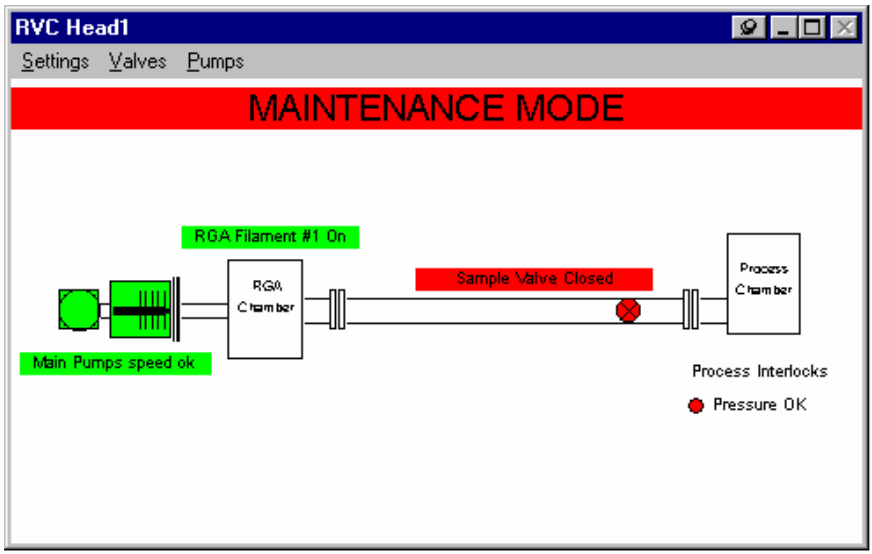

Figure 1 Typical RVC screen

If you have a multi headed system there will be one Remote Vacuum Controller window for each head. In RGA for Windows there is one additional menu item, **RVC** has been added to the **View** menu to control the display of the Remote Vacuum Controller. Apart from this all the other controls associated with the RVC are accessed from the Remote Vacuum Controller window and its *menu bar*. References to the *menu bar* refer to the *menu bar* in the RVC window not in the RGA for Windows screen

3.1.1. RVC window

The RVC has its own window which is only displayed if the Remote Vacuum Controller is fitted. This window may be *maximized*, *minimized* or re-sized in the normal way (see you Windows manual for details) using the controls in the top right hand corner of the Remote Vacuum Controller window. In the top left hand corner of the Remote Vacuum Controller screen is the Topmost Pin control. When this is enabled the Remote Vacuum Controller window will always remain on top whether it is *maximized* or *minimized*. This can also be enabled by selecting **Settings | Remain On Top** from the *menu bar*. The default setting is for the Remote Vacuum Controller window to remain on top.

3.2. Operating modes

There are three operating modes which are described below.

3.2.1. Manual mode

In the manual mode all the inlet valves will remain closed until the user opens a valve using the on-screen control and then the valve will only open if all the interlock conditions are satisfied. If the interlock conditions are not met the valve will remain closed. If, once the valve is open, one or more of the interlock conditions changes the valve will be closed and will not re-open until the interlock condition is satisfied and the user opens the valve using the on-screen control.

To select the manual mode select **Settings | Manual Mode** from the *menu bar* in the Remote Vacuum Controller window.

When manual mode is selected the mode bar will be yellow and the legend will read MANUAL VALVE MODE.

3.2.2. Automatic mode

In the automatic mode the inlet valve or valves will open when all the interlock conditions are satisfied without the user having to open them with the on-screen control. If, once the valve is open, one or more of the interlock conditions changes the valve will be closed but will re-open as soon as the interlock condition is satisfied.

To select the automatic mode select **Settings | Automatic Mode** from the *menu bar*.

When the automatic mode is selected the mode bar will be green and the legend will read AUTOMATIC VALVE MODE.

3.2.3. Maintenance mode

CAUTION

Maintenance mode should only be used by skilled personnel who are familiar with the system.

Do not switch to maintenance mode while operating in automatic valve mode.

In the maintenance mode all of the interlocks are disabled. All of the valves may be opened, the filaments and multiplier may be switched on regardless of the state of the system. The filaments may be switched on without the pumps running therefore exposing them to atmospheric pressures and burning them out. The inlet valves may be opened when the RGA chamber is vented thus exposing the process chamber to atmospheric pressure. This mode should not normally be used and if it is it should only be used by competent vacuum engineers.

Do not switch to maintenance mode while in automatic valve mode. Under this condition the valves to the process chamber will open automatically as soon as the RVC is switched to maintenance mode.

The maintenance mode is entered by turning the key switch on the front of the RVC to the **Interlocks Off** position. The RVC should be in the manual mode before the maintenance mode is selected.

When in the maintenance mode the mode bar will be red and the legend will read MAINTENANCE MODE.

If you are the person responsible for the RGA and/or the process chamber it may be a good idea to turn the key switch to the **Interlocks On** position, remove the key and put it somewhere safe.

3.3. Interlocks

3.3.1. Lo Vac Ok

The Lo Vac Ok signal is only used on systems fitted with two inlet valves. On systems with one inlet valve, the Sampling Valve, the signal is not needed an the control is not visible in the RVC window.

The Lo Vac Ok signal will usually come from an independent total pressure gauge monitoring the process chamber, a total pressure switch or the process control system. The Low Vacuum level will be the normal maximum process operating pressure (usually between $1x10^{-2}$ and $1x10^{-4}$ mBar) which will determine the size of the leak or setting of the metering valve in the by-pass. Once the pressure falls below the Low Vacuum level the Lo Vac Ok signal is set true, the Low Vacuum icon in the Remote Vacuum Controller windows will change color to green from red and the by-pass valve may be opened (if the other interlock conditions are satisfied).

Connection of the Low Vacuum signal is described in section 4.

3.3.2. Pressure OK

The Pressure Ok signal will usually come from an independent total pressure gauge monitoring the process chamber, a total pressure switch or the process control system.
In systems using two inlet valves the Pressure OK level will control the opening of the high conductance valve and is usually set to the maximum operating pressure for the quadrupole about $1x10^{-5}$ mBar. Once the pressure drops below the High Vacuum level the Pressure Ok signal is set true, the Pressure OK icon in the Remote Vacuum Controller window will change color to green from red and the high conductance valve may be opened (if the other interlock conditions are satisfied).

In systems which use one inlet valve, this valve is controlled by the Pressure OK signal. Once the pressure drops below the Pressure OK level the Pressure Ok signal is set true, the Pressure OK icon in the Remote Vacuum Controller window will change color to green from red and the sampling valve may be opened (if the other interlock conditions are satisfied). The setting for the Pressure OK level will depend on the inlet configuration and the ion source type but is likely to be between $1x10^{-1}$ and $1x10^{-5}$ mBar.

Connection of the High Vacuum signal is described in section 4.
The table below summaries the interlock conditions used in the manual and automatic modes. The required state is only reached when all the Conditions are satisfied.

Required State	Conditions
Filament On	Main Pumps On and up to speed No filament trips *
By-Pass Valve Open	Main Pumps On and up to speed Filament On Lo Vac Ok
Sampling Valve Open	Main Pumps On and up to speed Filament On Lo Vac Ok Pressure Ok

* Filament trips include X-Trip, P-Trip and T-Trip refer to RGA manual for details about these.

3.4. RVC controls

The following describes all of the controls available with the Remote Vacuum Controller. Note that not all of these will be available in each particular configuration.

3.4.1. Pumps on/off

CAUTION

Do not run the turbo with the pump disconnected from the controller.

Under no circumstances should the system be run with the turbo pump disconnected from the turbo controller as the controller will immediately report the pump being up to speed and if the filaments are switched on, they will be exposed to atmospheric pressure and will blow.

The pumps on/off control will always be available in all the RVC configurations. It controls the power to the turbo pump and backing pump used in the RGA vacuum system. When the pump is switched off the main pumps symbol will be shown in red and the main pumps legend will read **Main Pumps off.** To switch the pumps on *click* on the main pumps symbol or select **Pumps | Main Pumps**. Notice that when you move the mouse pointer over the main pumps symbol it changes to a hand indicating the control may be switched by *clicking* the mouse button. This is the same for all the RVC controls. The main pumps symbol will change to yellow and the main pumps legend will read **Main Pumps < 90%** indicating that the turbo pump is on but not up to speed. When the turbo comes up to speed the main pumps symbol will change to green and the legend will read **Main Pumps on**. The filaments cannot be turned on before the pump is on and up to speed The RGA Filament control changes to red from gray once the pump is up to speed.

3.4.2. Pump timer

Once the pump is switched on a timer starts. If the pump has not reached full speed within the currently selected pump timeout time the power to the pump will be switched off. The default pump timeout time is 5 minutes but this may be set to between 1 and 60 minutes by selecting **Pumps | Timeout** from the *menu bar*. The RVC Pump Timeout *dialog box* will be displayed, use the *spin buttons* to adjust the minutes and seconds then *click* on the **Ok** button. *Clicking* on the **Cancel** button will close the *dialog box* without the changes being implemented.

3.4.3. Filament on/off

In addition to the normal ways of switching a filament on (see the RGA for Windows or Process Eye manual) the filament may be switched on from the Remote Vacuum Controller window by *clicking* on the Filament label once the Main Pumps are up to speed. When the filaments are off the filament label will be gray and the legend will read Filaments off. The filament label will go red when the pumps are up to speed. To switch a filament on position the mouse pointer on the filament label, notice that the point turns to a hand symbol, then *click*. The filament warming up warning box will be displayed for about 8 seconds before the filament label changes to green and the legend will read Filament #1 On. If the filament should fail to come on the filament label will remain red.

Switching the filament on this way will switch filament 1 on.

The filament control in RGA for Windows or Process Eye will operate in the normal way.

3.4.4. Sampling valve

In the manual mode the high conductance valve may be opened by *clicking* on the Sampling Valve label or the Sampling Valve symbol or by selecting **Valves | Sample Valve** from the *menu bar*. The label Sampling Valve will be gray until all the interlock conditions are satisfied (main pumps on, filament on, Pressure ok) when it will change to red. The legend will read Sampling Valve Closed.

Once the label is red *clicking* on it will open the valve. The label will change to green and the legend will read Sampling Valve Open. *Clicking* on the label when it is gray will have no effect.

In the automatic mode the Sampling Valve will open when the interlock conditions are satisfied, the label will change in the same way as for the manual mode.

3.4.5. By-pass valve

In the manual mode the By-pass valve may be opened by *clicking* on the Fixed By-Pass Valve label or the Fixed By-Pass Valve symbol or by selecting **Valves | Fixed By-Pass Valve** from the *menu bar*. The label Fixed By-Pass will be gray until all the interlock conditions are satisfied (main pumps on, filament on, gate valve open, atmospheric inlet valve closed, low vacuum ok) when it will change to red. The legend will read Fixed By-Pass Closed.
Once the label is red *clicking* on it will open the valve. The label will change to green and the legend will read Fixed By-Pass Open. *Clicking* on the label when it is gray will have no effect.

In the automatic mode the fixed by-pass valve will open as soon as the interlock conditions are satisfied, unless a variable by-pass valve is also fitted, the label will change in the same way as for the manual mode.

When a variable by-pass valve and a fixed by-pass valve are fitted the fixed by-pass valve may only be opened manually, even when it the automatic mode.

3.4.6. Heater

The heater jacket output on the RVC1A may be enable by selecting **Settings | Heater** from the *menu bar*. When the heater output is on the BAKE indicator on the RVC1A will be illuminated and a tick will be shown next to the heater menu item.

Section 4.
Installation details

If the Vacuum Controller is supplied as an integral part of a factory assembled and tested system, this section should provide useful background information. The purpose of this part is to provide purchasers of this product, who wish to integrate it into an existing or self-assembled vacuum system, with the necessary technical information.

WARNING

The installation of this product must be carried out by skilled technical personnel who possess an in depth knowledge of vacuum engineering and electrical engineering and the safety standards relating to both fields. All procedures and wiring methods marked * safety * in the applications sections must be complied with.

The vacuum controller MUST be mounted in an equipment sub-rack, such that only the front panel is accessible by an operator. The enclosure surrounding the sub-rack, must have adequate rigidity and resistance against the spread of fire, within the meaning of EN61010-1:2002, parts 8 and 9.

The company will not be liable for any damage or injury due to failure to comply with the requirements of both the above statements.

4.1. Connector pin outs

Details of the 25 pin D-Type Microvision Plus control and the 15 pin D-Type Microvision Plus power connectors can be found in the Microvision Plus manual.

4.1.1. Skt1 Valve output

A 15 way D-Type socket.

Pin	Function	Notes
1	Valve 1 Open	open collector drive
2	Valve 2 Open	open collector drive
3	Alarm On	open collector drive
4	Pumps On	open collector drive
5	Bake On	open collector drive
6	Alarm Relay	Relay contacts “Form C”
7	Quad OK	open collector drive
8	Spare	
9	24V DC valve 1	current limited
10	24V DC valve 2	current limited
11	24V DC	current limited
12	24V DC	current limited
13	24 V DC	current limited
14	Alarm Relay	normally open contact
15	Alarm Relay	normally closed contact

4.1.2. J5 System inputs

A 26 way High Density D-Type socket.

Pin	Function	Notes
1	Vcc (+5V)	1K ohm impedance
2	High Vac Ok	opto-isolator anode
3	High Vac Ok	opto-isolator cathode
4	Ground (0V)	
5	Vcc (+5V)	1K ohm impedance
6	Low Vac Ok	opto-isolator anode

7	Low Vac Ok	opto-isolator cathode
8	Ground (0V)	
9	Turbo speed -ve	amplifier inverting input
10	Turbo speed +ve	amplifier non-inverting input

Pin	Function	Notes
11	Vcc (+5V)	1K ohm impedance
12	Vac Restart	opto-isolator anode
13	Vac Restart	opto-isolator cathode
14	Gnd (0V)	
15	Vcc (+5V)	47 ohm impedance
16	Gnd (0V)	
17	24 V DC	current limited
18	Gnd (0V)	current limited
19	Vcc (+5V)	1K ohm impedance
20	GPDI #1	opto-isolator anode
21	GPDI #1	opto-isolator cathode
22	Gnd (0V)	
23	Vcc (+5V)	1K ohm impedance
24	GPDI #2	opto-isolator anode
25	GPDI #2	opto-isolator cathode
26	Gnd (0V)	

4.1.3. Backing pump Skt C

A 4 pin twist lock socket

Pin 1 Live
Pin 2 Neutral
Pin 3 not used
Earth Earth

4.1.4. Bakeout power

A 4 pin twist lock socket to provide power to the heater jacket.

Pin 1	Live
Pin 2	Neutral
Pin 3	not used
Earth	Earth

4.2. Connecting vacuum pumps

The RVC1A is designed to control two vacuum pumps, a turbo molecular pump and its backing pump. Control of these pumps is achieved by controlling the mains power supply to them which is delivered from the RVC1A. The same circuit within the RVC1A controls both power supplies to the turbo pump controller and the backing pump. There are two methods for controlling the pumps, direct mains energisation or control via 24V DC coil relays or contactors. Direct energisation is often preferred as it is far simpler therefore, requires less work and there are fewer chances for mistakes.

4.2.1. Direct energisation

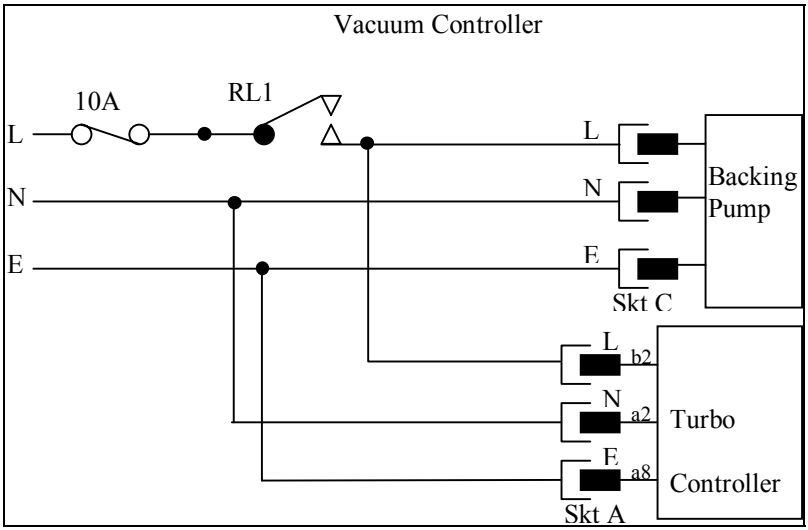

Figure 2 Pumps wiring (direct)

The unit contains a relay with single pole mains rated contacts. The turbo / backing pumps relay contact is wired to the two trailing leads through fuse FS2. The IEC socket connects to the turbo pump controller which will usually be mounted in an equipment rack next to the RVC1A. The 4 pin twist lock socket supplies power to the backing pump. The neutrals are looped through and power is delivered from the line cord.
The VACUUM CONTROLLER should be connected to the mains supply through a 16A fuse or circuit breaker.

* SAFETY * THE LIVE FEED TO THE VACUUM CONTROLLER MUST BE FUSED AND ALL WIRING MUST BE IN ACCORDANCE WITH LOCAL PRACTICE.

4.2.2. Slave relay energisation

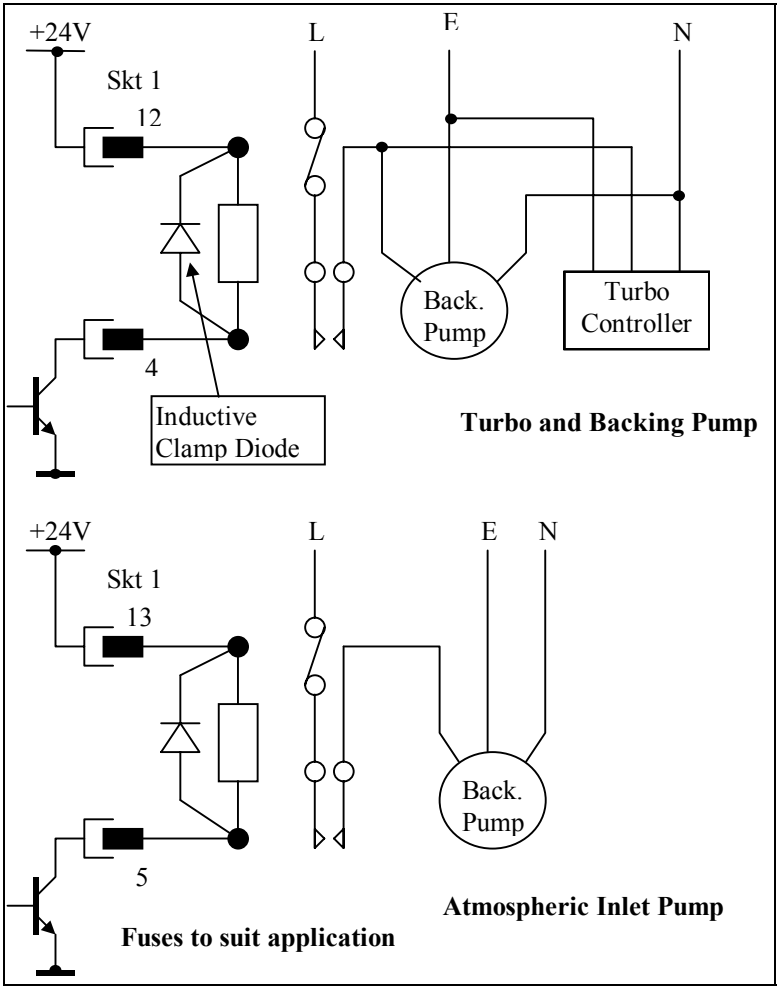

Figure 3 Pumps wiring (slave relay energisation)

If direct energisation is not possible, for instance because of distance to pumps or because the pumps take more power than the internal contacts can handle, it is possible to energize slave relays. The relay coils should be rated at 24V DC and the current consumption of each relay must not exceed 350mA. In addition, when added to the consumption of the other solenoids, the total consumption must not exceed 1.2 Amps.

The relay solenoids should be wired to a 15 way D type plug, to mate with the rear panel socket SKT1, as per **Figure 3 Pumps wiring (slave relay energisation)**. Note that although the unit is fitted with inductive clamping diodes, it is good practice to fit these at the solenoid.

* SAFETY * THE RELAY INSULATION CREEPAGE DISTANCES, CONTACTS RATINGS AND MAINS CIRCUITS WIRING MUST COMPLY WITH LOCAL REGULATIONS WITH RESPECT TO THE VOLTAGES AND CURRENTS HANDLED.

4.3. Interfacing to the Hi-Vac and Lo-Vac gauges

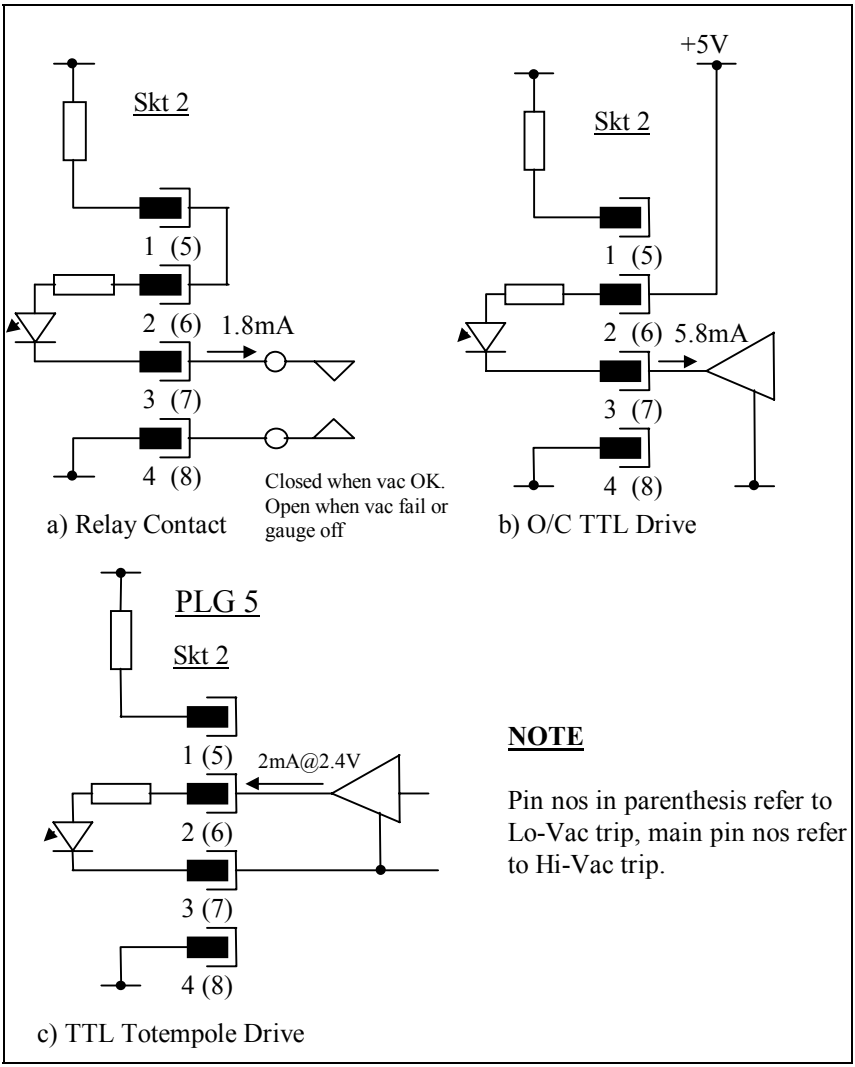

Figure 4 Vacuum trip connections

In order that the RVC can determine whether it is safe to grant a request to open the inlet valves, V1 and V2, it must know whether vacuum conditions in the users system are safe.
It is possible to hard wire both of these to the safe condition, BUT IT IS NOT RECOMMENDED.

The Lo-vac indication might come from a Pirani or Penning gauge with the trip point set at $1x10^{-2}$ to $1x10^{-4}$ Torr. The precise setting will depend on the pressure range for which the by-pass has been configured. The Hi-vac would come from a Penning or Ion gauge with the trip point set at $1x10^{-5}$ to $1x10^{-6}$ Torr. The precise pressure values will also depend on the type of ion source fitted to the quadrupole analyzer.

Both Hi and Lo vacuum trip interfaces are identical and can operate either from a TTL drive signal or from an uncommitted relay contact. Correct use of these interfaces should ensure that if the gauge is turned off, a fail indication will be set up.

Three possible methods of interfacing are shown in **Figure 4 Vacuum trip connections**, and apply to both the Hi-vac and Lo-vac trips. The connections are all made to the rear panel 26 way High Density D type connector, J5. The pin connections shown are for the Hi-vac trip, the numbers in parenthesis refer to the Lo-vac trip connections.

4.4. Control interface for turbo pump

The RVC1A has been designed to interface to the Balzers TCP015 controller. Unlike rotary and diaphragm pumps, turbo pumps and their controllers vary fundamentally in their design, even within the same manufacturers range.

There are two control paths to the TCP015, the on-off control and the analogue speed signal :

i) On-off control

This is carried out by switching the mains power feed to the controller. The power switch on the TCP015 must be left ON.

ii) Analog speed signal

Connected between J5, the 26 way High Density D type socket on the rear panel of the VACUUM CONTROLLER, and connector X5 on the TCP015 as shown in **Figure 5 TCP015 Turbo controller interface**.

* SAFETY * THE CONNECTIONS TO CONNECTOR X5 SHOULD BE SLEEVED OVER TO PREVENT CONTACT WITH PINS WHICH CARRY MAINS POWER. THE EARTH CONNECTION.

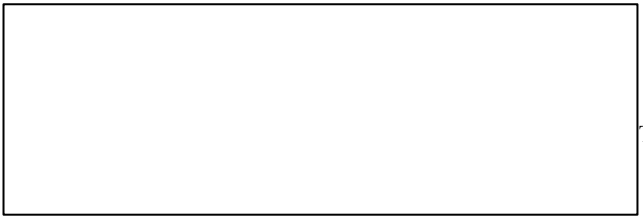

Figure 5 TCP015 Turbo controller interface

CAUTION

Do not run the turbo with the pump disconnected from the controller.

Under no circumstances should the system be run with the turbo pump disconnected from the turbo controller as the controller will immediately report the pump being up to speed and if the filaments are switched on, they will be exposed to atmospheric pressure and will blow.

4.5. Internal settings

There a number of internal jumpers, switches and trimpots which normally should not need to be altered. Details are given below for information.

JP6 is an eight way header via which the programmable logic chip may be programmed in circuit.

JP7 provides control of a by-pass valve on the inlet. With the jumper fitted the valve is disabled.

JP8 provides control of a high conductance valve on dual inlets or the valve on single valve inlets. With the jumper fitted the valve is disabled.

JP9 is used to speed up all the timing cycles during factory testing.

S1-1 changes the turbo pump timeout from 7.5 minutes to 15 minutes. The time is 7.5 minutes with the switch in the off position.

S1-2 changes the bake out time from 66 hours to 8 hours. The time is 66 hours with the switch in the off position.

S1-3&4 change the function of the RVC1A.

R118 is a trimpot which adjusts the turbo pump up to speed threshold.

R135 is a trimpot used to set the pump and bakeout timers.

Appendix 1
Health and safety clearance form

1. This form must be used when returning analyzers and other equipment for service.

2. A completed copy of this form should be faxed or sent by post to ensure that we have this information before we receive the equipment.

   A further copy should be handed to the carrier with the equipment.

3. Failure to complete the form or comply with the procedure will lead to delays in servicing the equipment.

RETURNS FORM

1. This form must be completed when returning equipment for service or repair.

2. Please complete the form and fax or send by first class post to the appropriate Spectra facility. Fax numbers and addresses can be found on the inside front page of this manual. Please ensure that we have this information before we receive the equipment. A copy should also be given to the carrier.

FAILURE TO COMPLETE THIS FORM OR COMPLY WITH THE PROCEDURE WILL LEAD TO DELAYS IN SERVICING THE EQUIPMENT

Please Complete The Following

Our RMA number: Customer P.O. No.

Customer Bill To Address:
Company
Department
Address

City
Zip/Postal Code

Customer Return To Address (if different from above):
Company
Department
Address

City
Zip/Postal Code
User's Name: Phone No.:

Equipment Shipped
Item 1: Serial No.:

Item 2: Serial No.:

Item 3: Serial No.:

Please describe the system fault in detail:

Details of all substances pumped or coming into contact with the returned equipment.
Chemical names:

Precautions to be taken in handling these substances:

Action to be taken in the event of human contact or spillage:

I hereby confirm that the only toxic or hazardous substances that the equipment specified above has been in contact with are named above, that the information given is correct and that the following actions have been taken:
1. The equipment has been securely packaged and labeled.
2. The carrier has been informed of the hazardous nature of the consignment.

Signed: Title:

Date: Phone No.: