VARIAN

vacuum technologies

Mini Ti-Ball™ Titanium Sublimation Source

(GB) INSTRUCTION MANUAL

Model 916-0008
Model 916-0009

87-400-361-00 (C)
APRIL 2006

Mini Ti-Ball™ Titanium Sublimation Source

VARIAN

vacuum technologies

Dear Customer,

Thank you for purchasing a VARIAN vacuum product. At VARIAN Vacuum Technologies we make every effort to ensure that you will be satisfied with the product and/or service you have purchased.

As part of our Continuous Improvement effort, we ask that you report to us any problem you may have had with the purchase or operation of our product. On the back side you find a Corrective Action Request form that you may fill out in the first part and return to us.

This form is intended to supplement normal lines of communications and to resolve problems that existing systems are not addressing in an adequate or timely manner.

Upon receipt of your Corrective Action Request we will determine the Root Cause of the problem and take the necessary actions to eliminate it. You will be contacted by one of our employees who will review the problem with you and update you, with the second part of the same form, on our actions.

Your business is very important to us. Please, take the time and let us know how we can improve.

Sincerely,

Sergio PIRAS

Vice President and General Manager
VARIAN Vacuum Technologies

Note: Fax or mail the Customer Request for Action (see backside page) to VARIAN Vacuum Technologies (Torino) - Quality Assurance or to your nearest VARIAN representative for onward transmission to the same address.

CUSTOMER REQUEST FOR CORRECTIVE / PREVENTIVE / IMPROVEMENT ACTION

TO: VARIAN VACUUM TECHNOLOGIES TORINO – QUALITY ASSURANCE

FAX N°: XXXX - 011 - 9979350

ADDRESS: VARIAN S.p.A. - Via F.lli Varian, 54 - 10040 Leiní (Torino) - Italy

E-MAIL: marco.marzio@varianinc.com

NAME:	COMPANY:	FUNCTION:

ADDRESS:

TEL. N°: _____ FAX N°: _____

E-MAIL: _____

PROBLEM / SUGGESTION:

REFERENCE INFORMATION (model n°, serial n°, ordering information, time to failure after installation, etc.):

DATE _____

CORRECTIVE ACTION PLAN /ACTUATION (by VARIAN VTT) LOG N° _____

XXXX – Code for dialing Italy from your country (es. 01139 from USA; 00139 from Japan, etc.)

VARIAN

INSTRUCTION FOR USE 1

TECHNICAL INFORMATION 2

OVERVIEW 2

SPECIFICATIONS 2

MOUNTING DIMENSIONS 2

INSTALLATION 5

Inspection 5

Assembly 5

Installation 6

Control Unit Connection 6

MAINTENANCE 6

Replacement Mini Ti-Ball™ Source (Model No. 916-0008) 6

Cleaning of Titanium Film 6

Cleaning Methods 6

Cleaning Procedure for Stainless Steel 6

PART LIST 7

Replacement Part List 7

GENERAL INFORMATION

The equipment described in this manual is intended for professional use. The user must carefully read this instruction manual and any additional information provided by Varian before using the equipment. Varian declines all responsibility for damage caused by the total or partial misuse of the instructions provided herein, by the improper use of the equipment by untrained personnel, by unauthorized interventions or by negligence in complying with any specific national rule or regulation.

The following sections provide you with all the information needed to guarantee the operator's safety when using the equipment. Detailed information is provided in the appendix entitled "Technical Information".

The following conventions are used in this manual:

WARNING!

Danger messages call the operator's attention to a specific procedure or operation that could cause serious injury if not performed correctly.

WARNING!

Warning messages are provided before procedures that could cause damage to the equipment if not complied with.

NOTE

Notes provide you with important information extracted from the text.

STORAGE

The equipment can be transported and stored under the following environmental conditions:

- Temperature: -20 °C to +70 °C
- Relative humidity: 0 to 95% (non-condensing)

PRIOR TO INSTALLATION

If you detect any damage to the equipment that could have been caused during transportation, contact your local sales office immediately.

When unpacking the equipment, be careful to avoid dropping it or knocking it against anything.

Do not dispose the packaging material in the environment. The packaging material is totally recyclable and complies with EEC directives 85/399 for the safeguard of the environment.

DISPOSAL

Meaning of the "WEEE" logo found in labels
The following symbol is applied in accordance with the EC WEEE (Waste Electrical and Electronic Equipment) Directive.
This symbol (**valid only in countries of the European Community**) indicates that the product it applies to must NOT be disposed of together with ordinary domestic or industrial waste but must be sent to a differentiated waste collection system.
The end user is therefore invited to contact the supplier of the device, whether the Parent Company or a retailer, to initiate the collection and disposal process after checking the contractual terms and conditions of sale.

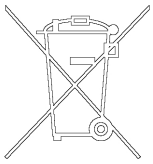

OVERVIEW

The Mini Ti-Ball™ Source is a superior titatium sublimation source for getter pumping in high vacuum and utrahigh vacuum systems. Directly interchangeable with Varian's standard TSP filament cartridge, the Mini Ti-Ball™ Source requires no additional water cooling or power.

Although designed for use with either Mini Ti-Ball™ TSP Control Units Model 929-0023 (50 Hz) or Model 929-0022 (60 Hz), the Mini Ti-Ball™ Source may be used with any other standard 380 Watt, 50 Amp AC filament power supply. The Source will fit any port with a 2¾" OD x 1½" ConFlat® flange.

Compact in design, the Mini Ti-Ball™ Source consists of a titamium ball assembly and holder mounted on 2¾" OD ConFlat flange. The center of the Mini Ti-Ball Source extends approximately 7½" into the vacuum system at what would be the approximate midpoint of the 3-filament cartridge assembly, which the Source replaces.

A characteristic of pure titanium is that it undergoes a shift in crystalline structure each time it passes through approximately 900 ºC. Therefore, it is recommended that the Mini Ti-Ball™ Source be kept at a standby power level (95-100 Watts, ~ 30 amps) while under vacuum rather than be cycled to an off condition when not in use. Excessive cycling can cause severe distortion of titanium ball, which can lead to premature end of life. Maintaining the Source at standby power does not consume titanium, since sublimation at this level is negligible.

SPECIFICATIONS

A. Holder

Vacuum Flange Size:	2¾" OD ConFlat®
Bakeability:	a. to 250 ºC for normal Operation b. to 450 ºC with reduced life caused by oxidation of braze joints.

B. Mini Ti-Ball™ Titanium Source

Total Usable Titanium	15.2 grams max.
Operating Current:	50 amps max.
Voltage:	7.6 V at holder
Operating Pressure Range:	≤ 20 millitorr

C. Sublimation Rate 0.25 gram/hour minimum, at 50 amps heater current

MOUNTING DIMENSIONS

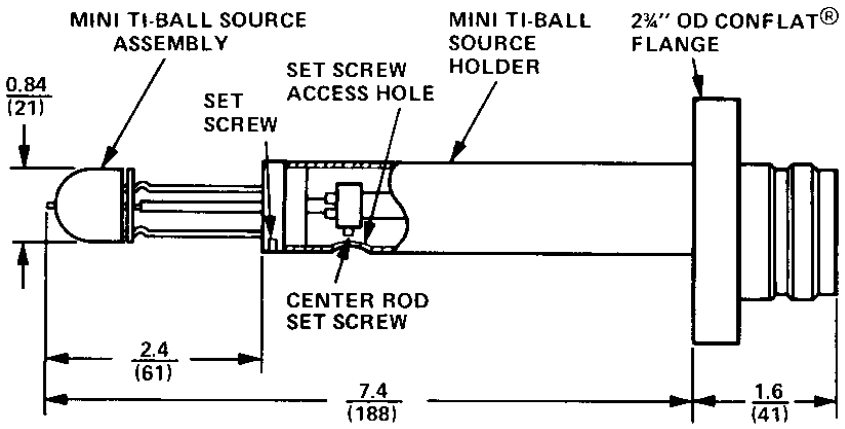

Dimensions: Inches / (Millimeters)

Mini Ti-Ball™ Source Assembly, Model No. 916-0009, Dimension Drawing

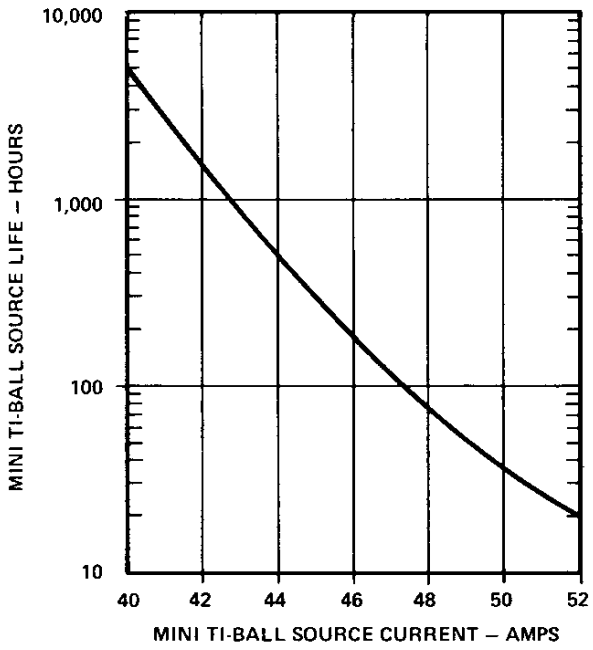

Mini Ti-Ball™ Source Life in Hours as a Function of Heater Current

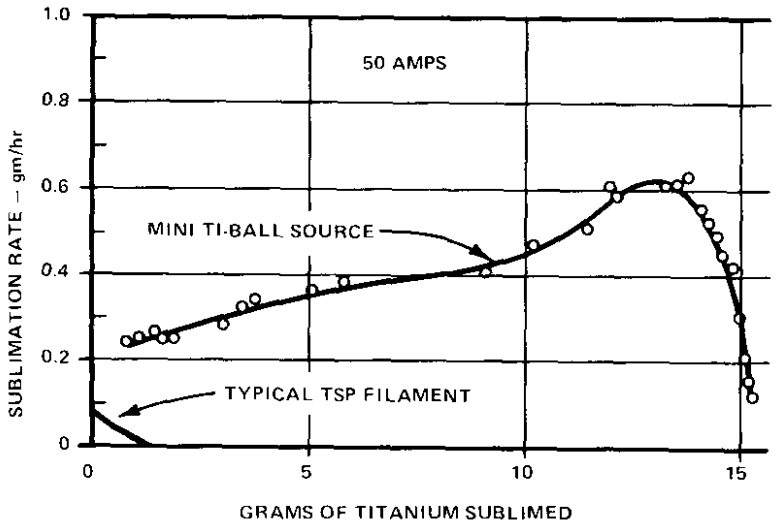

Mini Ti-Ball™ Source Sublimation Rate as a Function of Life

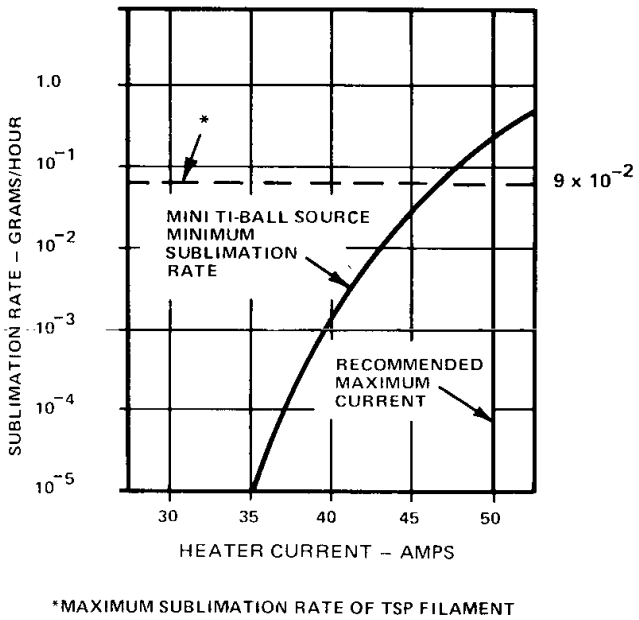

Mini Ti-Ball™ Source Minimum Sublimation Rate as a Function of Heater Current. The Rate of Sublimation Increases Somewhat with Life (at a Constant Heater Current)

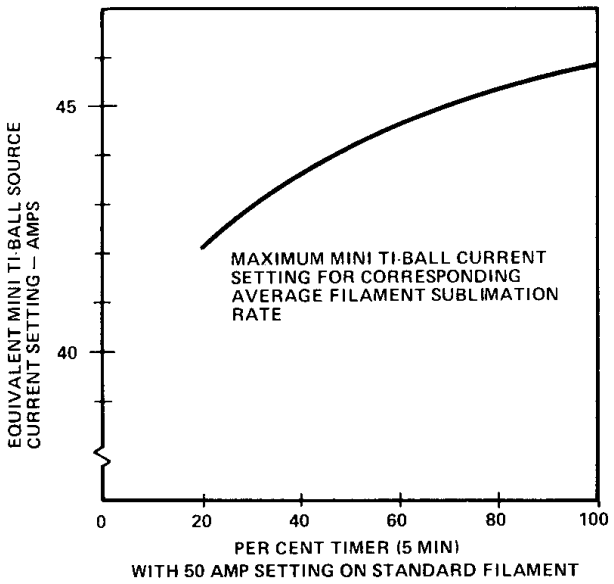

Determine what per cent time was used with old filament cartridge.
For example: 80% (4 minutes on and 1 minute off) = 46 amps on Mini Ti-Ball Source.

Equivalent Mini Ti-Ball™ Source Continuous Current Setting Corresponding to Average Sublimation Rate Setting when Using Old TSP Timer to Operate Filament with Initial 50-amp Setting (Note that the new Mini Ti-Ball™/TSP Control Unit features a 30-minute timer)

INSTALLATION

Inspection

The Mini Ti-Ball™ Source is shipped ready for assembly, The Mini Ti-Ball™ Source shipping package contains the Mini Ti-Ball™ Source assembly, Mini Ti-Ball holder, four set screws, and two bristol key wrenches. If you have ordered a replacement Mini Ti-Ball Source, the shipping package contains the Mini Ti-Ball™ Source assembly, four set screws and two bristol key wrenches.

The shipping package is designed to afford a satisfactory degree of protection against usual transportation handling. If the package is damaged, set the Source package aside and contact your receiving departement for instructions. If the package is intact, proceed with removal of Source.

Remove from shipping card by cutting plastic shin pack. Do not pull on ball or supports. Then cut the plastic tie-bands and carefully remove shipping spool from the Mini Ti-Ball™ Source, taking care not to exert force on the center (heater lead) pin.

Assembly

Assemble the Mini Ti-Ball™ Source and holder as follows:

1. Place the holder upright on a bench.
2. Slide the Mini Ti-Ball™ assembly into the holes until the central heater support leg extends approximately 1/16" beyond the set screw hole. See the following figure. It is important that all of the legs slide *freely* into their respective holes, so that the heater is not stressed when in operation.
3. Install and tighten the three 6-32 set screws holding the support wires.
4. Install and tighten the 8-32 set screw on the heater leg.

NOTE

Do not force the Mini Ti-Ball™ Source beyond the distance indicated as this may dislodge the source heater.

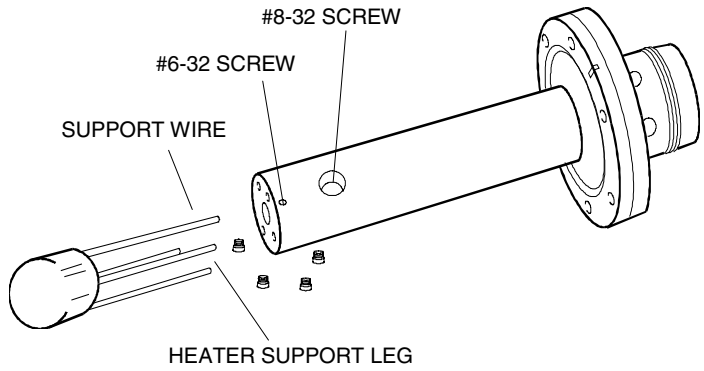

Mini Ti-Ball™ Source Assembly and Holder

Installation

Required vacuum hardware:

1. Copper gasket, Varian Model No. 953-5014.
2. High tensile screw and nut set, Varian Model No. 953-5020.
3. Fel-Pro thread lubricant, Varian Model No. 953-0031 (use ontly with ConFlat® Flange bolts, not with threaded parts internal to vacuum system).

To install the Mini Ti-Ball™ Source, proceed as follows:

1. Place a new copper gasket between the Mini Ti-Ball™ holder flange and the vacuum system port.
2. Lubricate screw and nut with Fel-Pro thread lubricant.
3. Uniformly tighten screw and nut set until the flange faces meet.

Control Unit Connection

The instruction manual supplied with your control unit should be consulted for installation and operation of that unit.

MAINTENANCE

Replacement Mini Ti-Ball™ Source (Model No. 916-0008)

End of life of a properly used Mini Ti-Ball™ Source is indicated by what appears to be an "open filament" condition. Remove and replace Mini Ti-Ball™ Source as follows:

1. Loosen the #8-32 set screw (gold) that holds the Heater Support Leg, but do not remove the screws completely. See the previous figure.
2. Loosen the three #6-32 set screws which fasten the Ti-Ball Support Wires, and carefully withdraw the Mini Ti-Ball™ Assembly.
3. Install a replacement Mini Ti-Ball™ Source as described previously.

Cleaning of Titanium Film

Titanium deposits build up on the surfaces of the vacuum chamber. These deposits will flake off, adding to the surface area to be pumped and cause the pumping performance to deteriorate.

Therefore, a procedure should be developed to deposit the minimum amount of titanium required for a pumping job so that the interval between cleaning operations is as long as possible.

Cleaning Methods

When cleaning is needed, use one of these methods:

Blast the internal surfaces of the pump chamber with glass beads or sand and then degrease it, OR Remove loose deposits and then use the cleaning procedure for stainless steel, following:

WARNING!

Titanium flakes are flammable and may spontaneously ignite when exposed to air. A dull red, short-lived flame may result. Also, vigorous abrasion may produce sparks. Accumulated flakes may ignite at any time in the presence of air, either on or off the substrate. Do not vacuum the flakes or leave them in contact with any flammable materials; flakes should be stored in a metal container until they can be disposed of. For Maximum safety during the trasportation to a cleaning facility, heavily coated surfaces should be enclosed in an air-tight container.

Cleaning Procedure for Stainless Steel

WARNING!

The chemicals used in this procedure are corrosive. Only authorized, trained personnel should make up the baths and process the parts. Personnel should be equipped with safety goggles, waterproof rubber gloves and apron. Chemical baths should be vented, and an eye wash shower located in immediate vicinity (see state safety regulations).

1. Solvent degrease i trichloroethane or equivalent.
2. Hot alkali dip for about two minutes, dependig on condition.
3. Rinse in hot tap water.
4. Hydrochloric acid dip. Solution 1:1 HC1 (tech) 9in water at 70 ºC.
5. Rinse in cold tap water.
6. Nitric-Hydrofluoric acid dip: conc. HNO_3, 97% by volume, conc. HF 3% by volume. Dip until surface gases slightly, then quickly rinse in water. Welds and knife-edge sealing surfaces will be attached by the acid. Excessive etching may cause pinhole leaks in welds or marginal seals.
7. Rinse in cold tap water three times.
8. Rinse in cold deionized water (NaCl less than 1 ppm) three times.
9. Methanol rinse (electronic grade).
10. Warm air dry in clean, filtered, fume free air at about 65 ºC
11. (Optional) Air bake at 150 ºC to 400 ºC for 30 minutes to one hour, depending on the mass of the part.

PART LIST

Replacement Part List

DESCRIPTION	QUANTITY REQUIRED	VARIAN MODEL PART NO.
Replacement Mini Ti-Ball™ Source	1	916-0008
Set screw 8-32 x 0.25 long	1	627347-04
Set screw 6-32 x 0.12 long	3	627347-02
Bristol Key Wrench #8	1	29-899906
Bristol Key Wrench #6	1	29-899904

Request for Return

1. A Return Authorization Number (RA#) **WILL NOT** be issued until this Request for Return is completely filled out, signed and returned to Varian Customer Service.
2. Return shipments shall be made in compliance with local and international **Shipping Regulations** (IATA, DOT, UN).
3. The customer is expected to take the following actions to ensure the **Safety** of workers at Varian: (a) Drain any oils or other liquids, (b) Purge or flush all gasses, (c) Wipe off any excess residues in or on the equipment, (d) Package the equipment to prevent shipping damage, (for Advance Exchanges please use packing material from replacement unit).
4. Make sure the shipping documents clearly show the RA# and then return the package to the Varian location nearest you.

North and South America	**Europe and Middle East**	**Asia and ROW**
Varian Vacuum Technologies	Varian SpA	Varian Vacuum Technologies
121 Hartwell Ave	Via Flli Varian 54	Local Office
Lexington, MA 02421	10040 Leini (TO) – ITALY	
Phone : +1 781 8617200	Phone: +39 011 9979111	
Fax: +1 781 8609252	Fax: +39 011 9979330	

CUSTOMER INFORMATION

Company name: ……

Contact person: Name: …… Tel: ……

Fax: …… E-Mail: ……

Ship Method: …… Shipping Collect #: …… P.O.#: ……

Europe only: VAT reg. Number: …… *USA only*: ☐ Taxable ☐ Non-taxable

Customer Ship To: …… Customer Bill To: ……

……

……

……

……

PRODUCT IDENTIFICATION

Product Description	Varian P/N	Varian S/N	Purchase Reference

TYPE OF RETURN *(check appropriate box)*

☐ Paid Exchange ☐ Paid Repair ☐ Warranty Exchange ☐ Warranty Repair ☐ Loaner Return
☐ Credit ☐ Shipping Error ☐ Evaluation Return ☐ Calibration ☐ Other …….

HEALTH and SAFETY CERTIFICATION

Varian Vacuum Technologies **CAN NOT ACCEPT** any equipment which contains **BIOLOGICAL HAZARDS** or **RADIOACTIVITY**. Call Varian Customer Service to discuss alternatives if this requirement presents a problem.

The equipment listed above (check one):

☐ **HAS NOT** been exposed to any toxic or hazardous materials

OR

☐ **HAS** been exposed to any toxic or hazardous materials. In case of this selection, check boxes for any materials that equipment was exposed to, check all categories that apply:

☐ Toxic ☐ Corrosive ☐ Reactive ☐ Flammable ☐ Explosive ☐ Biological ☐ Radioactive

List all toxic or hazardous materials. Include product name, chemical name and chemical symbol or formula.

……

Print Name: …… Customer Authorized Signature: ……

Print Title: …… Date: ……/……/……

NOTE: If a product is received at Varian which is contaminated with a toxic or hazardous material that was not disclosed, **the customer will be held responsible** for all costs incurred to ensure the safe handling of the product, and **is liable** for any harm or injury to Varian employees as well as to any third party occurring as a result of exposure to toxic or hazardous materials present in the product.

Do not write below this line

Notification (RA)#: …… Customer ID#: …… Equipment #: ……

VARIAN

Request for Return

ISO 9001 REGISTERED

FAILURE REPORT

TURBO PUMPS and TURBOCONTROLLERS

		POSITION	PARAMETERS	
☐ Does not start	☐ Noise	☐ Vertical	Power:	Rotational Speed:
☐ Does not spin freely	☐ Vibrations	☐ Horizontal	Current:	Inlet Pressure:
☐ Does not reach full speed	☐ Leak	☐ Upside-down	Temp 1:	Foreline Pressure:
☐ Mechanical Contact	☐ Overtemperature	☐ Other:	Temp 2:	Purge flow:
☐ Cooling defective		…….	OPERATION TIME:	

TURBOCONTROLLER ERROR MESSAGE:

ION PUMPS/CONTROLLERS

☐ Bad feedthrough	☐ Poor vacuum
☐ Vacuum leak	☐ High voltage problem
☐ Error code on display	☐ Other

Customer application:

VALVES/COMPONENTS

☐ Main seal leak	☐ Bellows leak
☐ Solenoid failure	☐ Damaged flange
☐ Damaged sealing area	☐ Other

Customer application:

LEAK DETECTORS

☐ Cannot calibrate	☐ No zero/high backround
☐ Vacuum system unstable	☐ Cannot reach test mode
☐ Failed to start	☐ Other

Customer application:

INSTRUMENTS

☐ Gauge tube not working	☐ Display problem
☐ Communication failure	☐ Degas not working
☐ Error code on display	☐ Other

Customer application:

PRIMARY PUMPS

☐ Pump doesn't start	☐ Noisy pump (describe)
☐ Doesn't reach vacuum	☐ Over temperature
☐ Pump seized	☐ Other

Customer application:

DIFFUSION PUMPS

☐ Heater failure	☐ Electrical problem
☐ Doesn't reach vacuum	☐ Cooling coil damage
☐ Vacuum leak	☐ Other

Customer application:

FAILURE DESCRIPTION

(Please describe in detail the nature of the malfunction to assist us in performing failure analysis):

NOTA: Su richiesta questo documento è disponibile anche in Tedesco, Italiano e Francese.
REMARQUE : Sur demande ce document est également disponible en allemand, italien et français.
HINWEIS: Auf Aufrage ist diese Unterlage auch auf Deutsch, Italienisch und Französisch erhältlich.

Sales and Service Offices

France and Benelux
Varian s.a.
7 Avenue des Tropiques
Z.A. de Courtaboeuf - B.P. 12
Les Ulis cedex (Orsay) 91941
France
Tel: (33) 1 69 86 38 84
Fax: (33) 1 69 86 29 88
From Benelux Tel: (31) 118 67 15 70
From Benelux Fax: (31) 118 67 15 69

Canada
Central coordination through:
Varian Vacuum Technologies
121 Hartwell Avenue
Lexington, MA 02421
USA
Tel: (781) 861 7200
Fax: (781) 860 5437
Toll Free # 1 (800) 882 7426

China
Varian Technologies - Beijing
Rm 1648 Central Tower South Wing
Beijing Junefield Plaza
No. 10 XuanWuMenWai Street
Beijing 100052
P.R. China
Tel: (86) 10 63108550
Fax: (86) 10 63100141
Toll Free: 800 820 6556

Germany and Austria
Varian Deutschland GmbH
Alsfelder Strasse 6
Postfach 11 14 35
64289 Darmstadt
Germany
Tel: (49) 6151 703 353
Fax: (49) 6151 703 302

India
Varian India PVT LTD
101-108, 1st Floor
1010 Competent House
7, Nangal Raya Business Centre
New Delhi 110 046
India
Tel: (91) 11 28521171
Fax: (91) 11 28521173

Italy
Varian Inc.
Vacuum Technologies
Via F.lli Varian 54
10040 Leini, (Torino)
Italy
Tel: (39) 011 997 9 111
Fax: (39) 011 997 9 350

Japan
Varian Vacuum Technologies
Sumitomo Shibaura Building, 8th Floor
4-16-36 Shibaura
Minato-ku, Tokyo 108
Japan
Tel: (81) 3 5232 1253
Fax: (81) 3 5232 1263
Toll Free: 0120 655 040

Korea
Varian Technologies Korea, Ltd
Shinsa 2nd Bldg. 2F
966-5 Daechi-dong
Kangnam-gu, Seoul
Korea 135-280
Tel: (82) 2 3452 2452
Fax: (82) 2 3452 2451
Toll Free: 080 222 2452

Mexico
Varian, S. de R.L. de C.V.
Concepcion Beistegui No 109
Col Del Valle
C.P. 03100
Mexico, D.F.
Tel: (52) 5 523 9465
Fax: (52) 5 523 9472

Taiwan
Varian Technologies Asia Ltd.
14F-6, No.77, Hsin Tai Wu Rd., Sec. 1
Hsi chih, Taipei Hsien
Taiwan, R.O.C.
Tel: (886) 2 2698 9555
Fax: (886) 2 2698 9678
Toll Free: 0800 051342

UK and Ireland
Varian Ltd.
6 Mead Road
Oxford Industrial Park - Yarnton
Oxford OX5 1QU - England
Tel: (44) 1865 291570
Fax: (44) 1865 291571

United States
Varian Vacuum Technologies
121 Hartwell Avenue
Lexington, MA 02421
USA
Tel: (781) 861 7200
Fax: (781) 860 5437

Other Countries
Varian Inc.
Vacuum Technologies
Via F.lli Varian 54
10040 Leini, (Torino)
Italy
Tel: (39) 011 997 9 111
Fax: (39) 011 997 9 350

Customer Support & Service:

North America
Toll-Free: 1 800 882 7426
vtl.technical.support@varianinc.com

Europe
Tel: 00 800 234 234 00
vtt.technical.support@varianinc.com

China
Toll-Free: 800 820 8266
vtc.technical.support@varianinc.com

Japan
Toll-Free: 0120 655 040
vtj.technical.support@varianinc.com

Korea
Toll-Free: 080 222 2452
vtk.technical.support@varianinc.com

Taiwan
Toll-Free: 0 800 051 342
vtw.technical.support@varianinc.com

Worldwide Web Site, Catalog and Order On-line:
www.varianinc.com

Representative in most countries

VARIAN

03/06