87-900-065-01
August 1996

Instruction Manual

Set Point/Remote Control card

Model 929-4110

VARIAN

DICHIARAZIONE DI CONFORMITA'

Varian S.p.A. dichiara sotto la propria responsabilità che gli alimentatori per pompe da vuoto sputter-ioniche delle serie: 9290022, 9290023, 9290190, 9290191, 9290196, 9290197, 9290200, 9290201, 9290290, 9290291, 9290300, 9290301, 9212001, 9294040, 9294050, 9294100, 9294110, 9295000, 9295001, 9295002, 9295003, 9295004, 9295005, 9295006, 9295007, 9296000, 9296001, 9296002, 9296003, 9296004, 9296005, 9296006, 9296007, 9296008, 9296009, 9296010, 9296011, 9296012, 9296013, 9296014, 9296015, rispettano i requisiti indicati dalla direttiva compatibilità elettromagnetica 89/336/CEE e dalla direttiva bassa tensione 73/023/CEE. Si garantisce la conformità dei prodotti sopracitati alle seguenti norme:

EN-CENELEC 55011	Classe A gruppo 1 Limiti e metodi di misura delle caratteristiche di radiodisturbo degli apparecchi industriali.
IEC 1000-4-2 (ex 801-2)	Compatibilità elettromagnetica delle misure in processi industriali. Parte 2: requisiti delle scariche elettrostatiche
IEC 1000-4-3 (ex 801-3)	Compatibilità elettromagnetica delle misure in processi industriali. Parte 3: requisiti dei campi elettromagnetici irradiati.
IEC 1000-4-4 (ex 801-4)	Compatibilità elettromagnetica delle misure in processi industriali. Parte 4: requisiti dei transitori elettrici di breve durata/a guizzo.
EN 61010-1	Prescrizioni di sicurezza per apparecchi elettrici di misura, controllo e per utilizzo in laboratorio. Parte 1: Prescrizioni generali.

KONFORMITÄTSERKLÄRUNG

Die Firma Varian S.p.A. erklärt unter eigener Haftung, daß die Speisegeräte für Sputter-Ionenpumpen der Serien 9290022, 9290023, 9290190, 9290191, 9290196, 9290197, 9290200, 9290201, 9290290, 9290291, 9290300, 9290301, 9212001, 9294040, 9294050, 9294100, 9294110, 9295000, 9295001, 9295002, 9295003, 9295004, 9295005, 9295006, 9295007, 9296000, 9296001, 9296002, 9296003, 9296004, 9296005, 9296006, 9296007, 9296008, 9296009, 9296010, 9296011, 9296012, 9296013, 9296014, 9296015, den Anforderungen der Richtlinie für elektromagnetische Kompatibilität 89/336/EWG und der Richtlinie für Niederspannung 73/023/EWG entsprechen. Es wird die Übereinstimmung der oben genannten Produkte mit den folgenden Normen garantiert:

EN-CENELEC 55011	Klasse A Gruppe 1 Einschränkungen und Meßmethoden der Funkstörungsmerkmale von industriellen Geräten.
IEC 1000-4-2 (ex 801-2)	Elektromagnetische Kompatibilität der Messungen bei industriellen Prozessen. Teil 2: Anforderungen zu elektrostatischen Abladungen
IEC 1000-4-3 (ex 801-3)	Elektromagnetische Kompatibilität der Messungen bei industriellen Prozessen. Teil 3: Anforderungen zu elektromagnetisch bestrahlten Feldern.
IEC 1000-4-4 (ex 801-4)	Elektromagnetische Kompatibilität der Messungen bei industriellen Prozessen. Teil 4: Anforderungen zu Kurzzeit-/Spitzenströmen.
EN 61010-1	Sicherheitsvorschriften für elektrische Meß- und Kontrollgeräte sowie für Geräte für den Laborgebrauch. Teil 1: Allgemeine Vorschriften.

DECLARATION DE CONFORMITE

Varian S.p.A. déclare, sous sa propre responsabilité, que les alimentations pour pompes à vide sputter-ioniques des séries 9290022, 9290023, 9290190, 9290191, 9290196, 9290197, 9290200, 9290201, 9290290, 9290291, 9290300, 9290301, 9212001, 9294040, 9294050, 9294100, 9294110, 9295000, 9295001, 9295002, 9295003, 9295004, 9295005, 9295006, 9295007, 9296000, 9296001, 9296002, 9296003, 9296004, 9296005, 9296006, 9296007, 9296008, 9296009, 9296010, 9296011, 9296012, 9296013, 9296014, 9296015, respectent les conditions requises par la directive concernant la compatibilité électromagnétique 89/336/CEE et par la directive basse tension 73/023/CEE. On garantit que les produits indiqués ci-dessous sont conformes aux normes suivantes:

EN-CENELEC 55011	Classe A groupe 1 Limites et méthodes de mesure des caractéristiques d'interférence des appareils industriels.
IEC 1000-4-2 (ex 801-02)	Compatibilité électromagnétique des mesures dans des processus industriels. Partie 2: conditions requises des décharges électrostatiques.
IEC 1000-4-3 (ex 801-03)	Compatibilité électromagnétique des mesures dans des processus industriels. Partie 3: requises des champs électromagnétiques irradiés.
IEC 1000-4-3 (ex 801-03)	Compatibilité électromagnétique des mesures dans des processus industriels. Partie 4: conditions requises des transitoires électriques rapides/à éclatement.
EN 61010-1	Prescriptions de sécurité des appareils électriques de mesure, de contrôle et pour utilisation en laboratoire. 1ère partie: Prescriptions générales

DECLARACIÓN DE CONFORMIDAD

Varian S.p.A. declara bajo su responsabilidad que los alimentadores para bombas de vacío sputter-iónicas de las series: 9290022, 9290023, 9290190, 9290191, 9290196, 9290197, 9290200, 9290201, 9290290, 9290291, 9290300, 9290301, 9212001, 9294040, 9294050, 9294100, 9294110, 9295000, 9295001, 9295002, 9295003, 9295004, 9295005, 9295006, 9295007, 9296000, 9296001, 9296002, 9296003, 9296004, 9296005, 9296006, 9296007, 9296008, 9296009, 9296010, 9296011, 9296012, 9296013, 9296014, 9296015, respetan los requisitos indicados por la directiva sobre la compatibilidad electromagnética 89/336/CEE CEE y por la norma de baja tensión 73/023/CEE. Se garantiza la conformidad de los productos anteriormente citados con las normas siguientes:

EN-CENELEC 55011	Clase A grupo 1 Límites y métodos de medición de las características de radioperturbación de los aparatos industriales.
IEC 1000-4-2 (ex 801-2)	Compatibilidad electromagnética de las mediciones en procesos industriales. Parte 2: requisitos de las descargas electrostáticas.
IEC 1000-4-3 (ex 801-3)	Compatibilidad electromagnética de las mediciones en procesos industriales. Parte 3: requisitos de los campos electromagnéticos irradiados.
IEC 1000-4-4 (ex 801-4)	Compatibilidad electromagnética de las mediciones en procesos industriales. Parte 4: requisitos de los transitorios eléctricos de poca duración/de salto.
EN 61010-1	Prescripciones de seguridad para equipos eléctricos de medición, control y para uso en laboratorio. Parte 1: Prescripciones generales.

DECLARAÇÃO DE CONFORMIDADE

A Varian S.p.A. declara, sob sua responsabilidade, que os alimentadores para bombas de vácuo sputter-iónicas das séries 9290022, 9290023, 9290190, 9290191, 9290196, 9290197, 9290200, 9290201, 9290290, 9290291, 9290300, 9290301, 9212001, 9294040, 9294050, 9294100, 9294110, 9295000, 9295001, 9295002, 9295003, 9295004, 9295005, 9295006, 9295007, 9296000, 9296001, 9296002, 9296003, 9296004, 9296005, 9296006, 9296007, 9296008, 9296009, 9296010, 9296011, 9296012, 9296013, 9296014, 9296015, respeitam os requisitos indicados pela directriz de compatibilidade electromagnética 89/336/EEC e pela directriz de baixa tensão 73/023/CEE. Garante-se a conformidade dos produtos citados acima com as seguintes normas:

EN-CENELEC 55011	Classe A grupo 1 Limites e métodos de medição das características de interferência na rádio-recepção dos aparelhos industriais.
IEC 1000-4-2 (ex 801-2)	Compatibilidade electromagnética das medidas em processos industriais. Parte 2: requisitos das descargas electrostáticas.
IEC 1000-4-3 (ex 801-3)	Compatibilidade electromagnética das medidas em processos industriais. Parte 3: requisitos dos campos electromagnéticos irradiados.
IEC 1000-4-4 (ex 801-4)	Compatibilidade electromagnética das medidas em processos industriais. Parte 4: requisitos dos transístores eléctricos de breve duração/por deslize.
EN 61010-1	Prescrições de segurança para aparelhos eléctricos de medição, controlo e para a utilização em laboratório. Parte 1: Prescrições gerais

CONFORMITEITSVERKLARING

Varian S.p.A. verklaart onder eigen verantwoordelijkheid dat de voedingsinrichtingen voor verstuivingsionenvacuümpompen en vacuümpompen van de series 9290022, 9290023, 9290190, 9290191, 9290196, 9290197, 9290200, 9290201, 9290290, 9290291, 9290300, 9290301, 9212001, 9294040, 9294050, 9294100, 9294110, 9295000, 9295001, 9295002, 9295003, 9295004, 9295005, 9295006, 9295007, 9296000, 9296001, 9296002, 9296003, 9296004, 9296005, 9296006, 9296007, 9296008, 9296009, 9296010, 9296011, 9296012, 9296013, 9296014, 9296015, aan de veiligheidseisen aangegeven in de richtlijn elektrische compatibiliteit 89/336/EEG en de richtlijn laagspanning 73/023/EEG voldoen. Men garandeert de conformiteit van bovengenoemde produkten aan de volgende normen:

EN-CENELEC 55011	Klasse A groep 1 Grenswaarden en meetmethodes van radiostoringskenmerken van industriële apparatuur.
IEC 1000-4-2 (ex 801-2)	Elektromagnetische compatibiliteit voor metingen van industriële processen. Deel 2: Eisen voor elektrostatische ontladingen.
IEC 1000-4-3 (ex 801-3)	Elektromagnetische compatibiliteit voor metingen van industriële processen. Deel 3: Eisen voor uitgestraalde elektromagnetische velden.
IEC 10004-4 (ex 801-4)	Elektromagnetische compatibiliteit voor metingen van industriële processen. Deel 4: Eisen voor snelle elektrische transiënten/bursts.
EN 61010-1	Veiligheidsvoorschriften voor elektrische meet- en regelapparatuur en voor gebruik in laboratoria. Deel 1: Algemene voorschriften.

OVERENSSTEMMELSESERKLÆRING

Varian S.p.A erklærer på eget ansvar, at strømkilderne til vakuumpumper ved ionpulverisering og vakuumpumper i serien 9290022, 9290023, 9290190, 9290191, 9290196, 9290197, 9290200, 9290201, 9290290, 9290291, 9290300, 9290301, 9212001, 9294040, 9294050, 9294100, 9294110, 9295000, 9295001, 9295002, 9295003, 9295004, 9295005, 9295006, 9295007, 9296000, 9296001, 9296002, 9296003, 9296004, 9296005, 9296006, 9296007, 9296008, 9296009, 9296010, 9296011, 9296012, 9296013, 9296014, 9296015, opfylder de krav, der er opstillet i direktivet vedr. elektromagnetisk kompatibilitet 89/336/EØF og lavspændingsdirektivet 73/023/EØF. Producenten forsikrer, at ovenstående produkter er i overensstemmelse med følgende normer:

EN-CENELEC 55011	Klasse A, gruppe 1 Begrænsninger for og metoder til måling af radiostøj ved industriudstyr.
IEC 1000-4-2 (tidligere 801-2)	Elektromagnetisk kompatibilitet i forbindelse med måling ved industriprocesser. Del 2: krav til elektrostatiske udladninger.
IEC 1000-4-3 (tidligere 801-3)	Elektromagnetisk kompatibilitet i forbindelse med måling ved industriprocesser. Del 3: krav til udstrålede elektromagnetiske felter.
IEC 1000-4-4 (tidligere 801-4)	Elektromagnetisk kompatibilitet i forbindelse med måling ved industriprocesser. Del 4: krav til spændingsspidser.
EN 61010-1	Sikkerhedsforskrifter vedr. elektrisk måle-, kontrol- og laboratorieudstyr. Del 1: Generelle forskrifter.

OVERENSSTEMMELSESERKLÆRING

Varian S.p.A erklærer under eget ansvar at strømkildene til vakuumpumper ved avskyting og vakuumpumper i serien 9290022, 9290023, 9290190, 9290191, 9290196, 9290197, 9290200, 9290201, 9290290, 9290291, 9290300, 9290301, 9212001, 9294040, 9294050, 9294100, 9294110, 9295000, 9295001, 9295002, 9295003, 9295004, 9295005, 9295006, 9295007, 9296000, 9296001, 9296002, 9296003, 9296004, 9296005, 9296006, 9296007, 9296008, 9296009, 9296010, 9296011, 9296012, 9296013, 9296014, 9296015, oppfyller kravene i direktivet vedr. elektromagnetisk kompatibilitet 89/336/EØF og lavspenningsdirektivet 73/023/EØF. Produsenten forsikrer at ovenstående produkter er i overensstemmelse med følgende normer:

EN-CENELEC 55011	Klasse A, gruppe 1 Begrensinger og metoder for måling av radiostøy ved industriutstyr.
IEC 1000-4-2 (tidligere 801-2)	Elektromagnetisk kompatibilitet i forbindelse med måling ved industriprosesser. Del 2: krav til elektrostatiske nedladinger.
IEC 1000-4-3 (tidligere 801-3)	Elektromagnetisk kompatibilitet i forbindelse med måling ved industriprosesser. Del 3: krav til utstrålte elektromagnetiske felt.
IEC 1000-4-4 (tidligere 801-4)	Elektromagnetisk kompatibilitet i forbindelse med måling ved industriprosesser. Del 4: krav til spenningsspisser
EN 61010-1	Sikkerhetsforskrifter vedrørende elektrisk måle-, kontroll- og laboratorieutstyr Del 1: Generelle forskrifter.

FÖRSÄKRAN OM ÖVERENSSTÄMMELSE

Varian S.p.A försäkrar på eget ansvar strömkällorna för vakuumpumpar med förstoftning och vakuumpumpar i serien 9290022, 9290023, 9290190, 9290191, 9290196, 9290197, 9290200, 9290201, 9290290, 9290291, 9290300, 9290301, 9212001, 9294040, 9294050, 9294100, 9294110, 9295000, 9295001, 9295002, 9295003, 9295004, 9295005, 9295006, 9295007, 9296000, 9296001, 9296002, 9296003, 9296004, 9296005, 9296006, 9296007, 9296008, 9296009, 9296010, 9296011, 9296012, 9296013, 9296014, 9296015, uppfyller de krav som omnämns i direktivet om elektromagnetisk kompatibilitet 89/336/EU samt lågspänningsdirektivet 73/023/EU. Tillverkaren garanterar ovan nämnda produkters överensstämmelse med följande normer:

EN-CENELEC 55011	Klass A, grupp 1 Gränser och metoder för mätning av radiostörningar hos industriutrustning.
IEC 1000-4-2 (f.d. 801-2)	Elektromagnetisk kompatibilitet i samband med mätning vid industriprocesser. Del 2: krav på elektrostatiska urladdningar.
IEC 1000-4-3 (f.d. 801-3)	Elektromagnetisk kompatibilitet i samband med mätning vid industriprocesser. Del 3: krav på utstrålade elektromagnetiska fält.
IEC 1000-4-4 (f.d. 801-4)	Elektromagnetisk kompatibilitet i samband med mätning vid industriprocesser. Del 4: krav på spänningsspetsar.
EN 61010-1	Säkerhetsföreskrifter för elektriska mät-, kontroll- och laboratorieinstrument. Del 1: Allmänna föreskrifter.

VAATIMUSTENMUKAISUUSVAKUUTUS

Varian S.p.A vakuuttaa, että sarjan 9290022, 9290023, 9290190, 9290191, 9290196, 9290197, 9290200, 9290201, 9290290, 9290291, 9290300, 9290301, 9212001, 9294040, 9294050, 9294100, 9294110, 9295000, 9295001, 9295002, 9295003, 9295004, 9295005, 9295006, 9295007, 9296000, 9296001, 9296002, 9296003, 9296004, 9296005, 9296006, 9296007, 9296008, 9296009, 9296010, 9296011, 9296012, 9296013, 9296014, 9296015, virtalähteet tyhjiöpumpuille ionipulveroinnilla vastaavat sähkömagneettista yhteensopivuutta koskevan direktiivin 89/336/EY ja pienjännitedirektiivin 73/023/EY vaatimuksia. Valmistaja takaa, että edellämainitut tuotteet ovat seuraavien vaatimusten ja normien mukaisia:

EN-CENELEC 55011	Luokka A, ryhmä 1 Tehdaslaitteiden ilmastohäiriöiden mittausmenetelmät ja -rajoitukset.
IEC 1000-4-2 (entinen 801-2)	Tehdaskäyttöisten mittauksien sähkömagneettisuuden yhteensopivuus. Osa 2: sähköstaattisten purkausten vaatimukset.
IEC 1000-4-3 (entinen 801-3)	Tehdaskäyttöisten mittauksien sähkömagneettisuuden yhteensopivuus. Osa 3: säteilyn sähkömagneettikentän vaatimukset.
IEC 1000-4-4 (entinen 801-4)	Tehdaskäyttöisten mittauksien sähkömagneettisuuden yhteensopivuus. Osa 4: jännitekärkien vaatimukset.
EN 61010-1	Mittaus-, ohjaus- ja laboratoriolaitteiden turvallisuusvaatimukset. Osa 1: Yleiset vaatimukset.

ΔΗΛΩΣΗ ΣΥΜΜΟΡΦΩΣΗΣ

Η εταιρεία **Varian S.p.A.** δηλώνει, αναλαμβάνοντας πλήρη ευθύνη, ότι οι τροφοδότες για αντλίες κενού της σειράς 9290022, 9290023, 9290190, 9290191, 9290196, 9290197, 9290200, 9290201, 9290290, 9290291, 9290300, 9290301, 9212001, 9294040, 9294050, 9294100, 9294110, 9295000, 9295001, 9295002, 9295003, 9295004, 9295005, 9295006, 9295007, 9296000, 9296001, 9296002, 9296003, 9296004, 9296005, 9296006, 9296007, 9296008, 9296009, 9296010, 9296011, 9296012, 9296013, 9296014, 9296015, συμμορφώνονται με τις ουσιαστικές προϋποθέσεις ασφαλείας που αναφέρονται στην Οδηγία ηλεκτρομαγνητικής συμβατικότητας **89/336/CEE**. και στην οδηγία χαμηλής τάσης **73/023/CEE** Εγγυούμαστε τη συμμόρφωση των παραπάνω προϊόντων με τους ακόλουθους κανονισμούς

EN-CENELEC 55011	Κλάση Α ομάδα 1 Όρια και μέθοδοι μέτρησης των χαρακτηριστικών των ραδιοπαρασίτων των βιομηχανικών συσκευών
IEC 1000-4-2 (ex 801-2)	Ηλεκτρομαγνητική συμβατικότητα των μετρήσεων στις βιομηχανικέςδιαδικασίες. Μέρος **2**: προϋποθέσεις των ηλεκτροστατικών εκκενώσεων.
IEC 1000-4-3 (ex 801-3)	Ηλεκτρομαγνητική συμβατικότητα των μετρήσεων στις βιομηχανικές διαδικασίες. Μέρος **3**: προϋποθέσεις των εκπεμπομένων ηλεκτρομαγνητικών πεδίων.
IEC 1000-4-4 (ex 801-4)	Ηλεκτρομαγνητική συμβατικότητα των μετρήσεων στις βιομηχανικές διαδικασίες. Μέρος **4**: προϋποθέσεις των ηλεκτρικών μεταβάσεων μικρής διαρκείας και απότομων
EN 61010-1	Διατάξεις ασφαλείας για ηλεκτρικές συσκευές μέτρησης, ελέγχου και για χρήση σε εργαστήριο. Μέρος **1**: Γενικές διατάξεις

CONFORMITY CERTIFICATE

Varian S.p.A. declares under its own responsibility that the series 9290022, 9290023, 9290190, 9290191, 9290196, 9290197, 9290200, 9290201, 9290290, 9290291, 9290300, 9290301, 9212001, 9294040, 9294050, 9294100, 9294110, 9295000, 9295001, 9295002, 9295003, 9295004, 9295005, 9295006, 9295007, 9296000, 9296001, 9296002, 9296003, 9296004, 9296005, 9296006, 9296007, 9296008, 9296009, 9296010, 9296011, 9296012, 9296013, 9296014 and 9296015, sputter-ionic vacuum pump power supplies comply with the requirements of the electromagnetic compatibility Directive 89/336/EEC and by the low voltage Directive 73/023/EEC. It guarantees that the products listed above comply with the following standards:

EN-CENELEC 55011	Class A group 1 Limits and measuring methods for the radio-frequency interference characteristics of industrial equipment.
IEC 1000-4-2 (formerly 801-2)	Electromagnetic compatibility for industrial process measurement. Part 2: Electromagnetic discharge requirements.
IEC 1000-4-3 (formerly 801-3)	Electromagnetic compatibility for industrial process measurement. Part 3: Radiated electromagnetic field requirements.
IEC 1000-4-4 (formerly 801-4)	Electromagnetic compatibility for industrial process measurement. Part 4: Electrical fast transient/burst requirements.
EN 61010-1	Safety requirements for electrical equipment for measurement, control and laboratory use. Part 1: general requirements

Varian SpA
Via Varian 54, 10040 Leini- Torino (Italy)

20 10 1998

S. Rizza

Vice President and General Manager

Table of Contents

Section		Page
-	**Safety summary**	ii
I	**Description**	
1-1	General	1-1
1-2	Set Point/Remote Control card description	1-2
II	**Installation**	
2-1	General	2-1
2-2	Card Installation	2-1
2-3	Input/Output connector	2-1
2-4	Connection example	2-1
III	**Operation**	
3-1	General	3-1
3-2	Output description	3-1
3-3	Input description	3-2
IV	**Maintenance & Spare parts**	
4-1	General	4-1
4-2	No communication with the card	4-1

SAFETY SUMMARY

Operators and service personnel must be aware of all hazards associated with this equipment. They must know how to recognize hazardous and potentially hazardous conditions, and know how to avoid them. The consequences of unskilled, improper, or careless operation of the equipment can be serious. This product must only be operated and maintained by trained personnel. Every operator or service person must read and thoroughly understand operation/maintenance manuals and any additional information provided by Varian. All warnings and cautions should be read carefully and strictly observed. Address any safety, operation, and/or maintenance questions to your nearest Varian office.

The following format is used in this manual to call attention to hazards:

WARNING
Warnings are used when failure to observe instructions or precautions could result in injury or death.

CAUTION
Cautions are used when failure to observe instructions could result in damage to equipment, whether Varian-supplied or other associated equipment.

NOTE
Information to aid the operator in obtaining the best performance from the equipment.

1-1 General

The Set Point/Remote Control card (Fig. 1-1) is an optional card that can be added to the Varian's MultiVac controller to provide to the user eight input and eight output for each H.V. card.

The card consists of two printed circuit boards (called "base board" and "expansion board") interconnected between them and with two 37 pin connector for connection with external equipment. Each printed circuit board is dedicated to one H.V. card. The longest PCB is referring to H.V. channel 1 while the shorter is referring to H.V. channel 2. The two 37 pin "D" type connectors have exactly the same pin out.

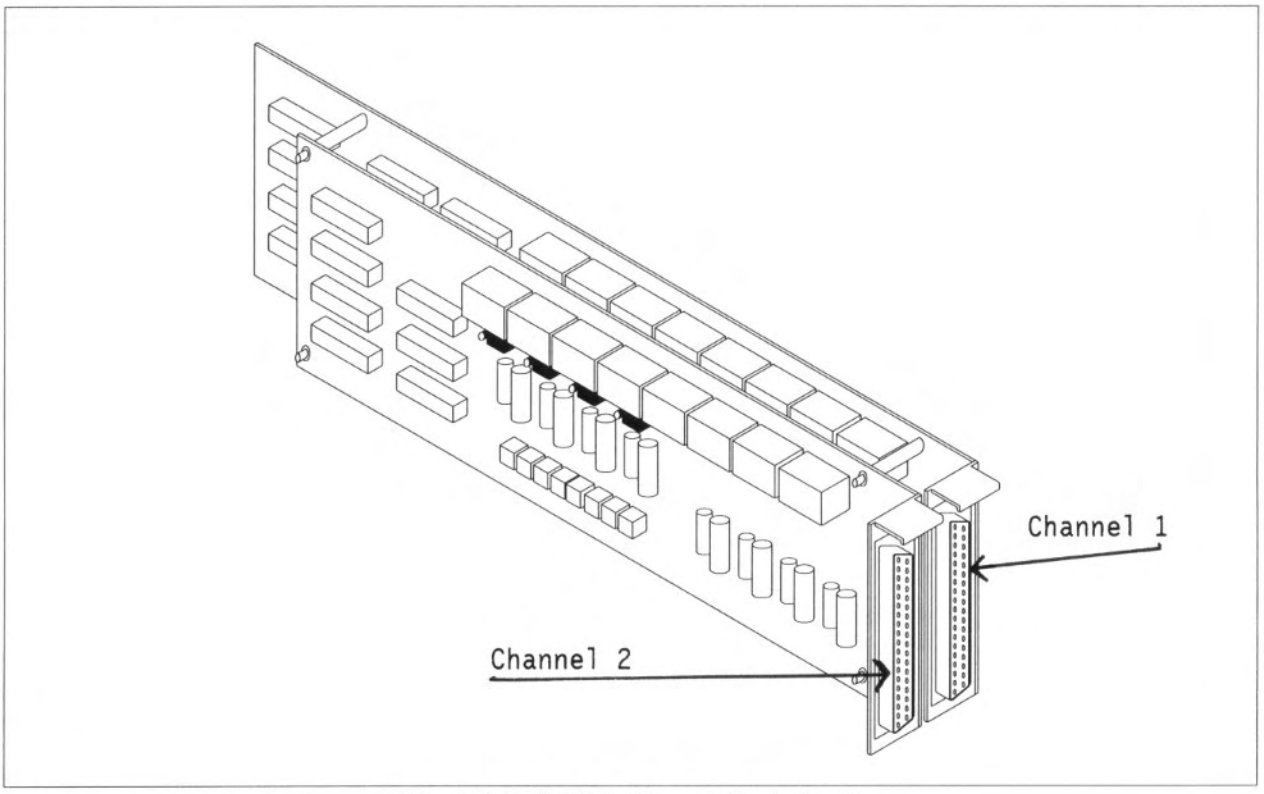

Figure 1-1 - Set Point/Remote Control card

1-2 Set Point/Remote Control card description

The card (see Fig. 1-2) is inserted on the base unit bus from which it receives the enabling signals and data, and to which it sends the input data.

The address incoming from the base unit microprocessor board is decoded to select the corresponding register on the base or expansion board. The write signals enable the writing of the output signals on the output register. The read signals enable the reading of one of the two input registers: the first one is dedicated to read-back the output signals, the second one is dedicated to read the input signals from the external.

The output signals are connected to the external connector by means of eight relays activated by the output signals. The normally open and normally closed contacts of relays 5 to 8 are available on the card output connector.

Output signals corresponding to relay 1 to 4 can be taken on the normally open or normally close contacts according to the position of the relevant jumper on the card (W1 to W4). All the jumpers are factory set for normally open contact.

The maximum ratings of the ouput are the following:

- 0.5 A at 120 Vac or 110 Vdc
- 0.2 A at 250 Vac or 220 Vdc
- 2 A at 30 Vdc.

The inputs are optoisolated and need an external supply (3 to 32 Vdc 20 mA max).

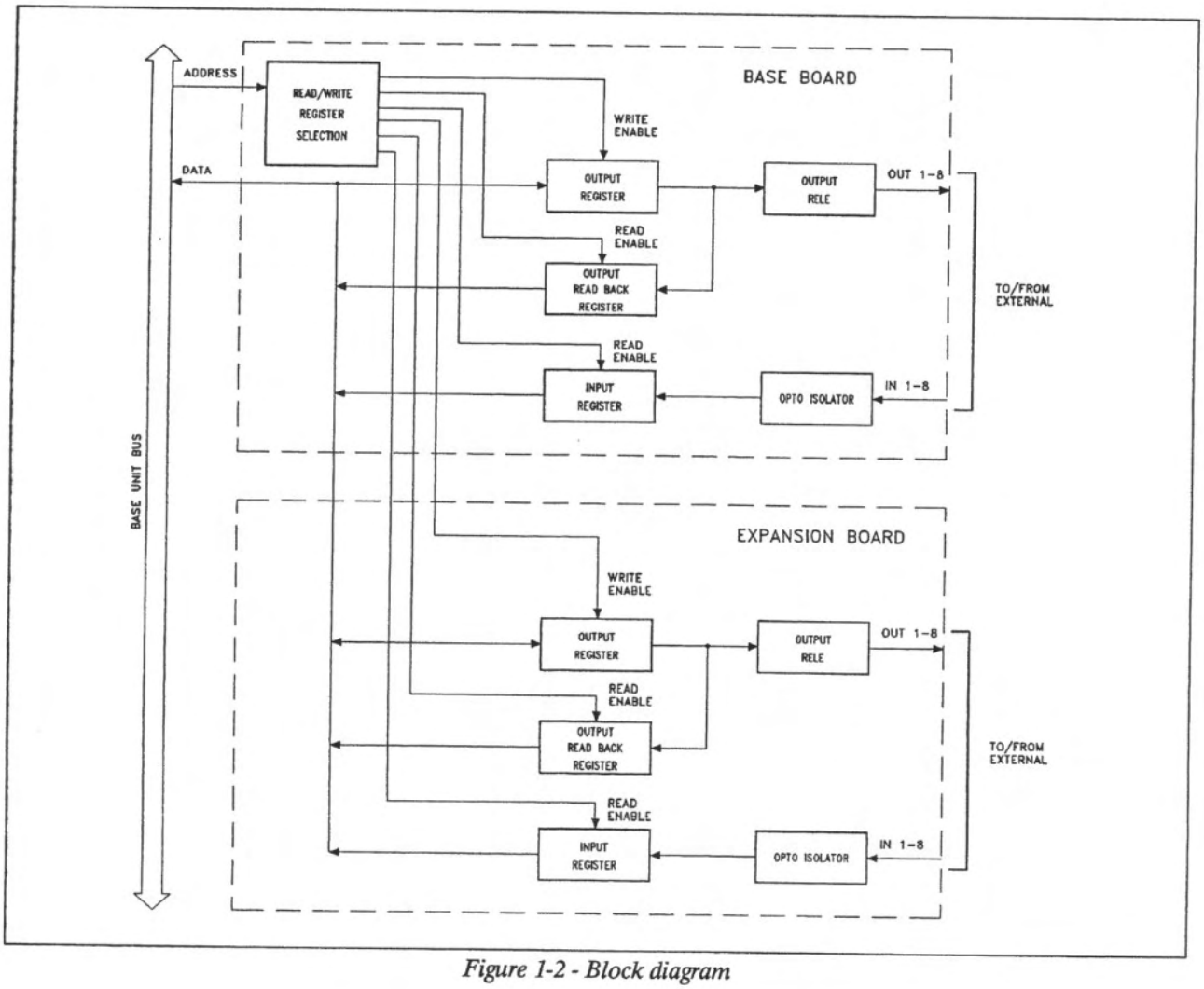

Figure 1-2 - Block diagram

2-1 General

Inspect the card for any shipping damage.

WARNING
High voltage developed in the controller can cause severe injury or death. Before servicing the unit, disconnect the input power cable.

2-2 Card Installation

- Open the unit by removing the four screws (1) aside of the unit (see Fig. 2-1)
- Carefully insert the card into its slot (see Fig. 2-2)

NOTE
During installation the card must be pushed towards the rear panel. *After insertion, the hook point must enter into the hole.*

- Verify that there is no loose hardware or metal parts inside the MultiVac base unit. Replace the cover and secure it with screws.
- Before connecting the power cord to the wall socket be sure that the voltage change over is currently set.

2-3 Input/Output connector

The input/output connector signals are shown in Fig. 2-3.

2-4 Connection example

In Figs. 2-4 and 2-5 are illustrated a typical connection for each input and the output equivalent circuit.

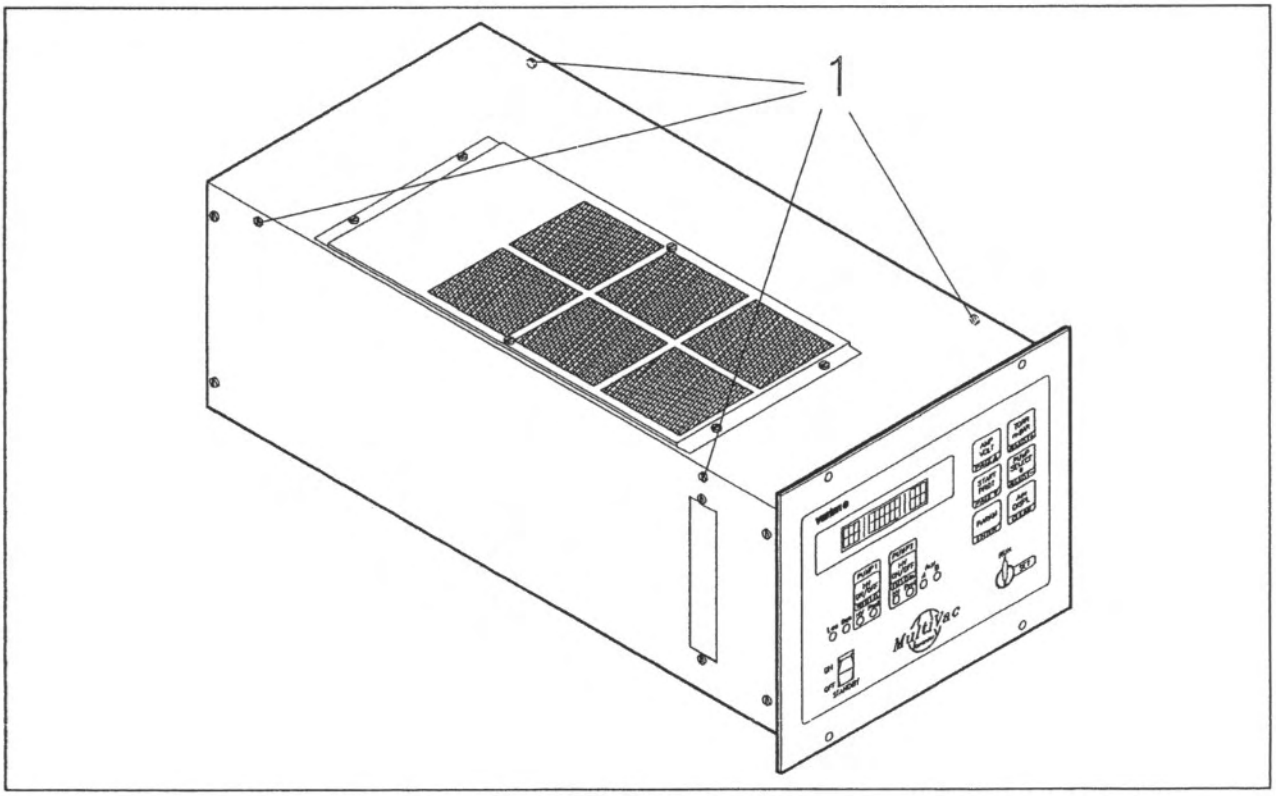

Figure 2-1 - Cover removing

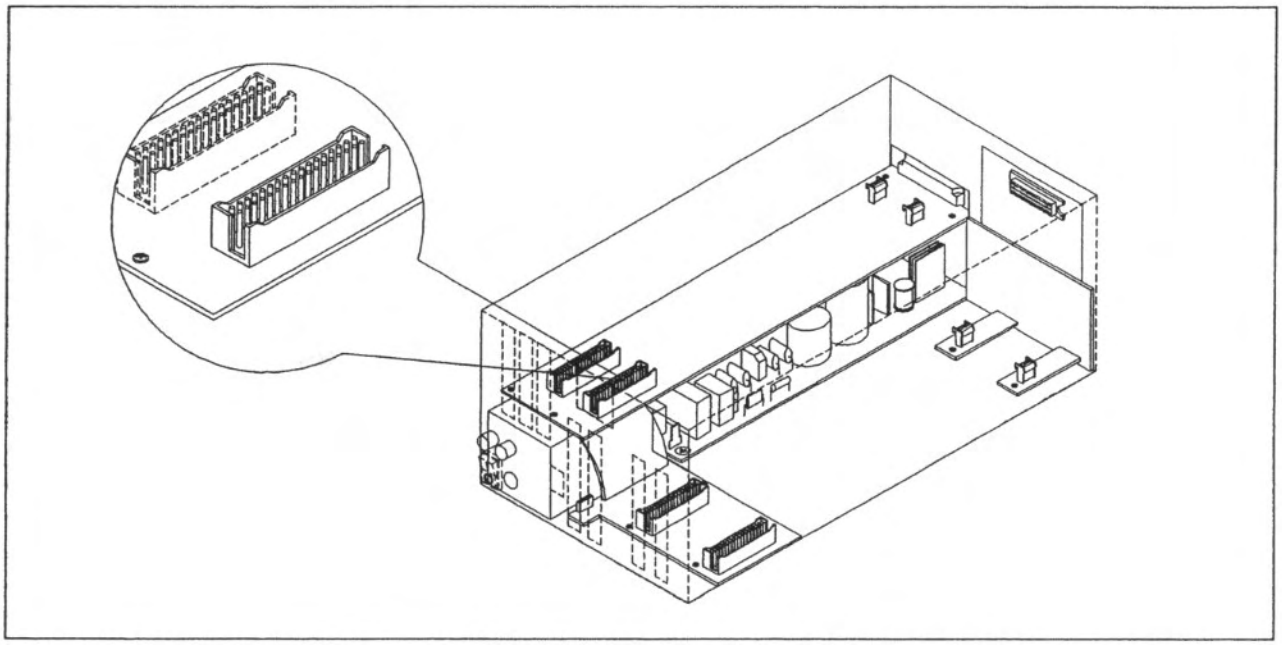

Figure 2-2 - Card installation

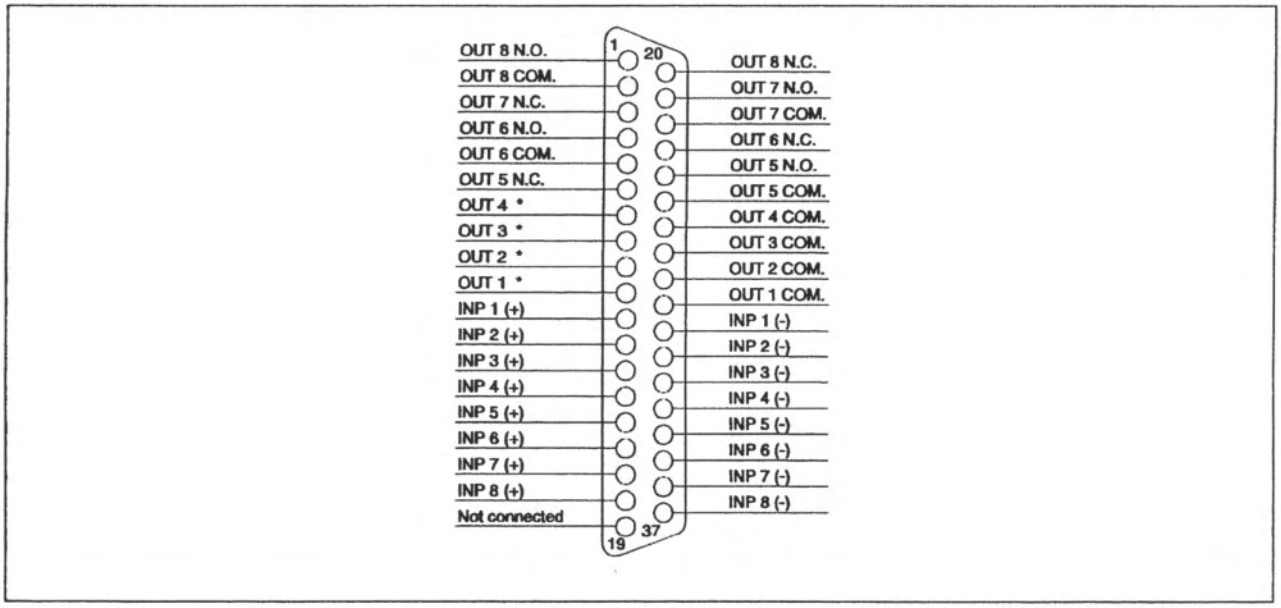

Figure 2-3 - Input/Output connector

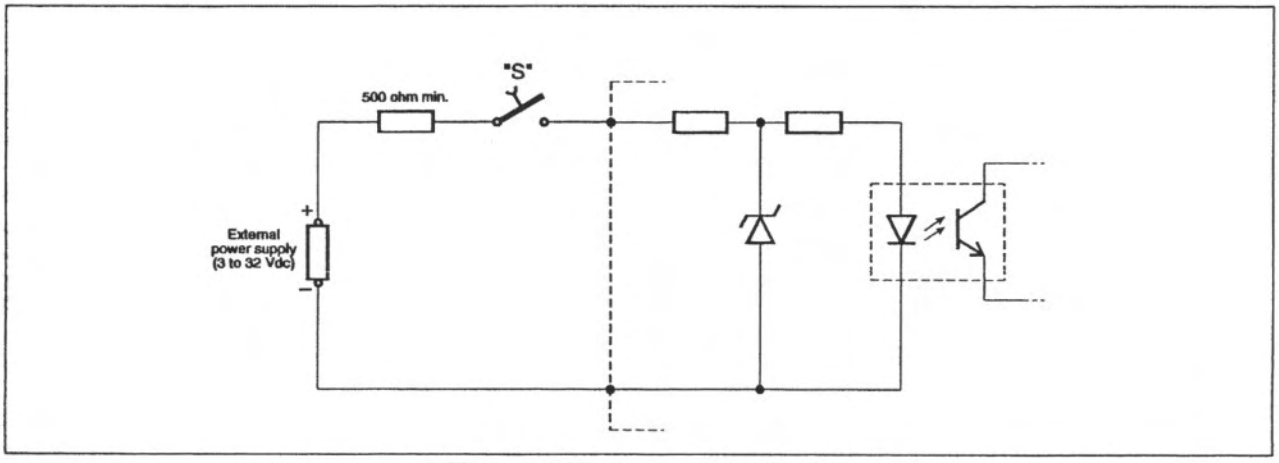

Figure 2-4 - Typical input connection

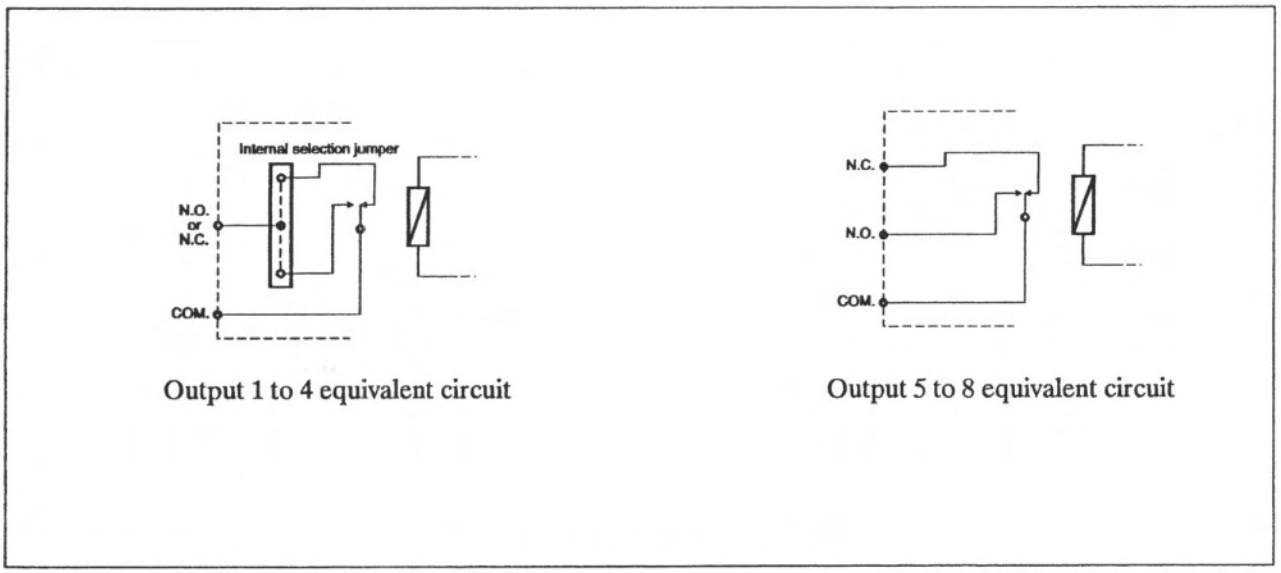

Figure 2-5 - Output equivalent circuit

This page is intentionally left blank

3-1 General

When the Set Point/Remote Control card is installed, the MultiVac can operates in LOCAL or in REMOTE I/O mode according to the previous selection or to the new one.

At any time it is possible to change the operating mode: refer to para. 3-2 of MultiVac controller base unit Instruction Manual.

3-2 Output description

The following table describes the output signals available on the interface connector.

Output Relay	Pin	Signal	Description
1	10 (N.O. or N.C.) 29 (common)	High Voltage ON	The relay is activated when the corresponding High Voltage card is giving High Voltage at the output.
2	9 (N.O. or N.C.) 28 (common)	Set Point 2	The relay is activated if the pump pressure is "Lower" than the choosen Set Point Level (a ± 10% hysteresis is provided to avoid oscillations).
3	8 (N.O. or N.C.) 27 (common)	Set Point 1	The relay is activated if the pump pressure is "Lower" than the choosen Set Point Level (a ± 10% hysteresis is provided to avoid oscillations).
4	7 (N.O. or N.C.) 26 (common)	Polarity	The relay is activated if the choosen High Voltage polarity is "Negative".
5	24 (N.O.) 6 (N.C.) 25 (common)	Interlock OK	The relay is activated if the External Interlock (Input 1) is Low.
6	4 (N.O.) 23 (N.C.) 5 (common)	Fault	The relay is activated if the High Voltage has been switched off by any fault condition.
7	21 (N.O.) 3 (N.C.) 22 (common)	Remote mode	The relay is activated when the Remote Communication operating mode is selected.
8	1 (N.O.) 20 (N.C.) 2 (common)	Protected mode	The relay is activated when Protect operating mode is selected.

3-3 Input description

The following table describes the input signals available on the interface connector.

Input N.	Pin	Signal	Description (ref. to Fig. 2-4)
1	11 (positive) 30 (negative)	External Interlock	It requires two stable positions signal. **Switch "S" closed**: The High Voltage output of the corresponding H. V. card is disabled. **Switch "S" open**: The H. V. output of the corresponding H.V. card is enabled.
2	12 (positive) 31 (negative)	Confirm	It requires a momentary signal. The transition from switch "S" open to switch "S" closed switches on the High Voltage output of the corresponding H. V. card if the "Output off" input (n. 3) is enabled.
3	13 (positive) 32 (negative)	Output off	It requires two stable positions signal. **Switch "S" closed**: The High Voltage output of the corresponding H. V. card is enabled, and, if "Confirm" input (n. 2) is momentary fed, the High Voltage output is switched on. **Switch "S" open**: The High Voltage output of the corresponding H. V. card is switched off.
4	14 (positive) 33 (negative)	Start-Protect mode selection	It requires two stable positions signal. **Switch "S" closed**: Protect selected **Switch "S" open**: Start selected.
5	15 (positive) 34 (negative)	Remote I/O - Remote Communication select.	It requires a momentary signal. The transition from switch "S open to switch "S" closed switches alternatively from Remote Communication (commands taken from RS 232-422 Computer Interface card) operation to Remote I/O (commands taken from Set Point/Remote Control card) operation and viceversa.
6	16 (positive) 35 (negative)	Step V-Fixed V mode selection	It requires two stable positions signal. **Switch "S" closed**: Step V selected **Switch "S" open**: Fixed V selected.
7	17 (positive) 36 (negative)	Spare	

Input N.	Pin	Signal	Description (ref. to Fig. 2-4)
8	17 (positive) 36 (negative)	Spare	

NOTE
The Input 1 (External Interlock), if connected, operates independently from the operational mode (Local, Remote Communication, Remote I/O). *The activation of this input (switch "S" closure) causes the H.V. output of the xcorresponding H.V. card to be switched off even if the unit is operating in Local or Remote Communication mode.*

This page is intentionally left blank

4-1 General

Replacement controllers are available on advance exchange basis through Varian Service, but, if necessary, information are provided to aid the operator in determining malfunctions and corrective steps to be taken through minor actions.

WARNING

High voltage in the controller can cause severe injury or death. Service must be performed by authorized personnel only.

Before servicing, turn power off and disconnect the power cord.

4-2 No communication with the card

If this occurs, it may be that:

- the Set Point/Remote Control card or the microcomputer board are defective
- the connection cable is defective
- the microcomputer board is blocked.

Try to change the connection cable with a new one and turn off and on again the unit. Should the error still be present, call the maintenance service.

This page is intentionally left blank

Varian Vacuum Technologies – Varian S.p.A.
Via Varian 54
10040 Leinì (Torino) - Italy

Varian Vacuum Technologies Lexington
121 Hartwell Avenue
Lexington, Massachusetts 02421 – USA

FRANCE & WALLONIE

Varian s.a.
7, Avenue des Tropiques
Z.A. de Courtaboeuf B.P.12
F91941 Les Ulis Cedex - France
Telephone: (33) 1 69863884
Fax: (33) 1 69282308

GERMANY, AUSTRIA

Varian GmbH
Alsfelder Strasse 6
Postfach 11 14 35
64289 Darmstadt - Germany
Telephone: (49) 6151703353
Fax: (49) 6151703302

U.K. & IRELAND

Varian Ltd.
28 Manor Road
Walton on Thames
Surrey KT12 2QF - U.K.
Telephone: (44) 1932 898000
Fax: (44) 1932 228769

ITALY
Varian Vacuum Technologies
Varian S.p.A. - VP Sales Office
Via Varian 54
10040 Leinì (Torino) - Italy
Telephone: (39) 011 9979111
Fax: (39) 011 9979316

BENELUX

Varian Vacuum Technologies
Rijksstraatweg 269 H,
3956 CP Leersum
The Netherlands
Telephone: (31) 343469910
Fax (31) 343469961

SPAIN

Varian Iberica S.L.
Avenida Pedro Diez, 25, 3rd Floor
E-28019 Madrid, Spain
Telephone: (34) 91 4727612
Fax: (34) 91 4725001

INDIA

Varian India Pvt. Ltd.
101 Competent House
7, Nangal Raya Business Centre
New Delhi 110 046 - India
Telephone:(91) 11 5548444
Fax: (91) 11 5548445

CHINA

Varian Technologies Asia, Ltd.
Rm. 2611 Concordia Plaza
1 Science Museum Rd,
Tsimshatsui East, Kowloon
Hong Kong
Telephone: (852) 26206173
Fax: (852) 26206338

JAPAN

Varian Technologies Japan
Sumitomo Shibaura Bldg.
4-16-36 Shibaura Minato ku
Tokyo 108 - Japan
Telephone: (81) 352321211
Fax: (81) 352321263

AUSTRALIA

Varian Australia Pty Ltd.
6/81 Frenchs Forest Road
Frenchs Forest NSW 2086
Australia
Telephone: (61) 299758805
Fax: (61) 294522600

TAIWAN

Varian Technologies Asia, Ltd
Taiwan Branch
18F-13 No. 79, Sec. 1, Hsin Tai Wu Rd.,
Hsi Chih, Taipei Hsien, Taiwan
Telephone: (886) 2 26989555
Fax: (886) 2 26989678

KOREA

Varian Technologies Korea, Ltd.
Head Office
Shinsa 2nd Bldg. 2F, 966-5
Daechi-Dong, Kangnam-Seoul,
Korea 135-280
Telephone: (82) 234522452
Fax (82) 234522451

USA, SOUTH & CENTRAL AMERICA

Varian Vacuum Technologies
121 Hartwell Avenue
Lexington, MA 02421 - USA
Telephone: (781) 8617200
Fax: (781) 8605437
Toll free: 1 800 8827426

CANADA

Varian Canada Inc.
6705 Millcreek Drive, Unit 5
Mississauga, Ontario L5N 5R9
Canada
Telephone: (905) 8198188
Fax: (905) 8198348
Toll free: 1 800 6632727

OTHER COUNTRIES
Varian Vacuum Technologies
Varian S.p.A. - VP Sales office
Via Varian 54
10040 Leinì (Torino) - Italy
Telephone: (39) 011 9979111
Fax: (39) 011 9979316

Printed in Italy – November 1999

All specifications are subject to change without notice

Copyright© by Varian S.p.A. Italy 1999