VARIAN
vacuum technologies

# *Vaclon Plus 500 pumps*

## 919-1710/1720/1730/1740
## 919-1711/1721/1731/1741
## 919-1712/1722/1732/1742
## 919-1750/1760/1770/1780
## 919-1751/1761/1771/1781
## 919-1752/1762/1772/1782

*(I) MANUALE DI ISTRUZIONI*

*(D) BEDIENUNGSHANDBUCH*

*(F) NOTICE DE MODE D'EMPLOI*

*(GB) INSTRUCTION MANUAL*

87-900-104-01(C)
APRIL 2006

# *Vaclon Plus 500*

VARIAN

vacuum technologies

*Dear Customer,*

*Thank you for purchasing a VARIAN vacuum product. At VARIAN Vacuum Technologies we make every effort to ensure that you will be satisfied with the product and/or service you have purchased.*

*As part of our Continuous Improvement effort, we ask that you report to us any problem you may have had with the purchase or operation of our product. On the back side you find a Corrective Action Request form that you may fill out in the first part and return to us.*

*This form is intended to supplement normal lines of communications and to resolve problems that existing systems are not addressing in an adequate or timely manner.*

*Upon receipt of your Corrective Action Request we will determine the Root Cause of the problem and take the necessary actions to eliminate it. You will be contacted by one of our employees who will review the problem with you and update you, with the second part of the same form, on our actions.*

*Your business is very important to us. Please, take the time and let us know how we can improve.*

*Sincerely,*

*Sergio PIRAS*

*Vice President and General Manager*
*VARIAN Vacuum Technologies*

*Note: Fax or mail the Customer Request for Action (see backside page) to VARIAN Vacuum Technologies (Torino) - Quality Assurance or to your nearest VARIAN representative for onward transmission to the same address.*

**CUSTOMER REQUEST FOR CORRECTIVE / PREVENTIVE / IMPROVEMENT ACTION**

TO : VARIAN VACUUM TECHNOLOGIES TORINO - QUALITY ASSURANCE

FAX N° : XXXX - 011 - 9979350

ADDRESS: VARIAN S.p.A. - Via F.lli Varian, 54 - 10040 Leinì (Torino) - Italy

E-MAIL : marco.marzio@varianinc.com

| NAME | COMPANY | FUNCTION |
|---|---|---|
| _____ | _____ | _____ |

ADDRESS : _____

TEL. N° : _____ FAX N° : _____

E-MAIL : _____

PROBLEM / SUGGESTION :

_____

REFERENCE INFORMATION (model n°, serial n°, ordering information, time to failure after installation, etc.) :

_____

DATE _____

CORRECTIVE ACTION PLAN / ACTUATION LOG N° _____
(by VARIAN VTT)

_____

XXXX = Code for dialing Italy from your country ( es. 01139 from USA; 00139 from Japan, etc.)

VARIAN

ISTRUZIONI PER L'USO ..... 1

GEBRAUCHSANLEITUNG ..... 3

MODE D'EMPLOI ..... 5

INSTRUCTIONS FOR USE ..... 7

TECHNICAL INFORMATION ..... 9

DESCRIPTION OF THE VACION PUMP ..... 9
TECHNICAL SPECIFICATION ..... 9
OUTLINE DRAWING ..... 12
STRAY MAGNETIC FIELD ..... 12
VACION PLUS PUMP INSTALLATION ..... 13
Inspection procedure ..... 13
Visual inspection ..... 13
Vacuum evaluation ..... 14
Short circuits ..... 14
TYPICAL INSTALLATION ..... 14
INLET FLANGE CONNECTION ..... 15
CONTROL UNIT CONNECTION ..... 16
SAFETY INTERLOCK ..... 16
HEATER INSTALLATION ..... 16
HEATER REPLACEMENT ..... 17
BAKEOUT OPERATION ..... 17
Bakeout of VacIon pump with the integral heaters ..... 17
OPERATING PROCEDURE ..... 18
MAINTENANCE ..... 18
Exchange of pumping element ..... 18
Exchange of the high voltage feedthrough. ..... 19
Leakage current check ..... 19
High-potting ..... 19
PUMP TROUBLESHOOTING ..... 20
VACION *PLUS* PUMP REPLACEMENT PARTS AND ACCESSORIES ..... 21
VACION *PLUS* PUMP CONTROLLERS ..... 21

## INFORMAZIONI GENERALI

Questa apparecchiatura è destinata ad uso professionale. L'utilizzatore deve leggere attentamente il presente manuale di istruzioni ed ogni altra informazione addizionale fornita dalla Varian prima dell'utilizzo dell'apparecchiatura. La Varian si ritiene sollevata da eventuali responsabilità dovute all'inosservanza totale o parziale delle istruzioni, ad uso improprio da parte di personale non addestrato, ad interventi non autorizzati o ad uso contrario alle normative nazionali specifiche.
Le pompe della serie Vaclon *Plus* sono pompe ioniche utilizzate comunemente per applicazioni di ultra alto vuoto, grazie alla loro pulizia, capacità di pompare qualsiasi tipo di gas, e del loro funzionamento senza vibrazioni e necessità di manutenzione.
Nei paragrafi seguenti sono riportate tutte le informazioni necessarie a garantire la sicurezza dell'operatore durante l'utilizzo dell'apparecchiatura. Informazioni dettagliate sono fornite nell'appendice “Technical information”.
**Questo manuale utilizza le seguenti convenzioni:**

**PERICOLO!**

I messaggi di pericolo attirano l'attenzione dell'operatore su una procedura o una pratica specifica che, se non eseguita in modo corretto, potrebbe provocare gravi lesioni personali.

**ATTENZIONE!**

I messaggi di attenzione sono visualizzati prima di procedure che, se non osservate, potrebbero causare danni all'apparecchiatura.

***NOTA***

*Le note contengono informazioni importanti estrapolate dal testo.*

## PREPARAZIONE PER L'INSTALLAZIONE

La pompa viene fornita in un imballo protettivo speciale; se si presentano segni di danni, che potrebbero essersi verificati durante il trasporto, contattare l'ufficio vendite locale.
Durante l'operazione di disimballaggio, prestare particolare attenzione a non lasciar cadere la pompa e a non sottoporla ad urti o vibrazioni.
Non disperdere l'imballo nell'ambiente. Il materiale è completamente riciclabile e risponde alla direttiva CEE 85/399 per la tutela dell'ambiente.

**ATTENZIONE!**

Onde evitare problemi di degassamento, non toccare con le mani nude i componenti destinati ad essere esposti al vuoto. Utilizzare sempre i guanti o altra protezione adeguata.

***NOTA***

*La pompa non può essere danneggiata rimanendo semplicemente esposta all'atmosfera. Si consiglia comunque di mantenerla chiusa fino al momento dell'installazione sul sistema onde evitare eventuale inquinamento da polvere.*

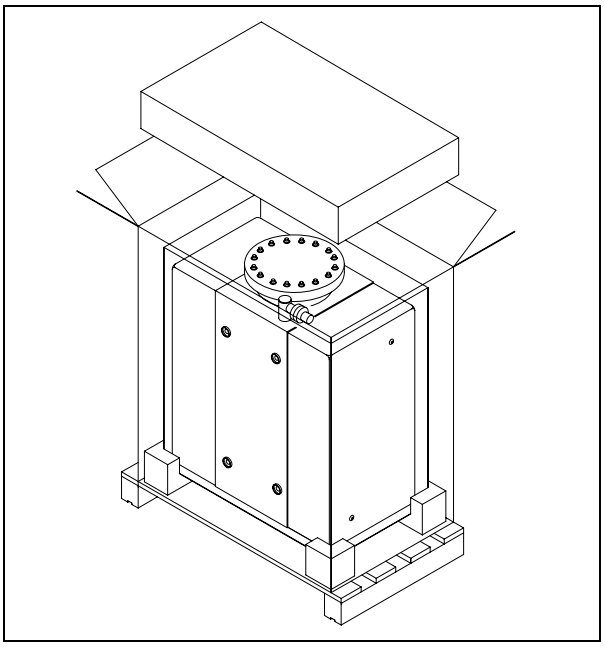

## INSTALLAZIONE

**PERICOLO!**

La pompa, a causa del suo peso, deve essere maneggiata tramite appositi attrezzi di sollevamento e spostamento.

Non installare e/o utilizzare la pompa in ambienti esposti ad agenti atmosferici (pioggia, gelo, neve), polveri, gas aggressivi, in ambienti esplosivi o con elevato rischio di incendio. Durante il funzionamento, per ottenere le specifiche tecniche dichiarate, la temperatura ambiente deve essere compresa tra 0 °C e +85 °C.

**ATTENZIONE!**

La pompa deve essere tenuta sigillata con il suo tubo di ingresso schiacciato finchè non è pronta per essere collegata al sistema.

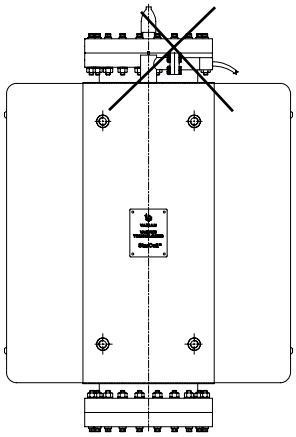


**PERICOLO!**

Per evitare lesioni alla persona, non collegare l’alta tensione alla pompa prima che sia installata nel sistema e che tutte le flange di ingresso siano adeguatamente collegate o chiuse.

Il funzionamento delle pompe è ottimizzato solo con l'uso delle apposite unità di controllo Varian (Dual, MidiVac o MiniVac).

**☞ATTENZIONE!**

Il rispetto delle normative di sicurezza nell'uso delle pompe è garantito solo con l'uso delle unità di controllo Varian.

La pompa VacIon *Plus* può essere installata in qualsiasi posizione. Per convenienza normalmente viene montata in posizione verticale con la flangia di ingresso in alto.
Per installazioni con posizione diversa dalla verticale, la pompa deve essere sostenuta tramite i piedini di montaggio posti sul suo fondo.
Per informazioni dettagliate sull'installazione della pompa, vedere l'appendice "Technical Information".

## USO

Tutte le istruzioni per il corretto funzionamento delle pompe VacIon *Plus* sono contenute nel manuale dell'unità di controllo. Leggere attentamente tale manuale prima dell'utilizzo.
Si raccomanda di portare la pompa ad una pressione di $1x10^{-4}$ Torr (mbar) in modo da ottenere un avvio più rapido. A questo scopo è meglio non utilizzare una pompa meccanica sigillata con olio, ma se deve essere utilizzata una tale pompa, si raccomanda di inserire una trappola lungo la linea di vuoto per ridurre la pressione causata dai vapori di acqua e di olio provenienti dalla pompa meccanica. Cercare di ridurre al minimo il tempo in cui la pompa meccanica è aperta verso il sistema e verso la pompa ionica, poiché i suoi vapori si diffondono nel sistema a pressioni inferiori a $1x10^{-1}$ Torr (mbar) causando una contaminazione dello stesso. Nei sistemi in cui l'olio deve essere completamente assente, è meglio utilizzare pompe Turbo per la suddetta operazione.
Depositi igroscopici e l'assorbimento dell'idrogeno all'interno del composto di titanio possono provocare l'allungamento del tempo di avvio con l'invecchiamento della pompa. Durante l'esposizione all'aria, il deposito del composto di titanio assorbe vapore acqueo; in conseguenza di ciò, al successivo avvio, il riscaldamento della pompa provoca il rilascio del vapore e di parte dell'idrogeno pompato precedentemente, con l'effetto dell'allungamento del tempo di avvio.

### Procedure di uso

Controllare che la polarità dell'unità di controllo sia corretta per la pompa: polarità positiva per le pompe Diode e negativa per le StarCell e le Triode. Fare riferimento al relativo manuale ed osservare la seguente procedura per l'uso della pompa:

1. Tramite una pompa di pre-vuoto portare il sistema da vuoto ad una pressione minima di avvio in accordo alla tabella di pagina 9 ed a seconda del tipo di pompa ionica.
2. Collegare l'unità di controllo ad una apposita fonte di alimentazione ed accenderla.
3. Osservare la tensione, la corrente e la pressione. Se l'avvio è avvenuto ad una pressione di $5x10^{-2}$ Torr (mbar), è tipica una tensione di circa 300 - 400 V. Un valore di corrente prossimo alla corrente di corto circuito dell'unità di controllo è indice dell'esistenza di una perdita nella pompa e nel sistema. Un temporaneo incremento della pressione di pre-vuoto è normale durante la fase di avvio.
4. Lasciare la valvola di pre-vuoto aperta durante l'avvio della pompa ionica finchè non si raggiunge una adeguata pressione di avvio. Se la tensione della pompa ionica scende dopo la chiusura della valvola, riaprirla per un pre-pompaggio aggiuntivo. Appena la pressione diminuisce, la tensione cresce nuovamente e la valvola di pre-vuoto può essere chiusa.
5. Quando la tensione ha raggiunto i 2 - 3kV, mettere l'unità di controllo nello stato PROTECT. Il sistema sarà così autoprotetto dall'incremento della pressione oltre $1x10^{-4}$ Torr (mbar) quando la pompa non è controllata. Nel caso in cui ci fosse un tale incremento, l'unità di controllo viene spenta automaticamente.
6. La pressione nella pompa può anche essere calcolata leggendo la corrente e convertendo la lettura in pressione tramite l'apposito diagramma pressione-corrente illustrato nell'appendice "Technical Information" di questo manuale.

***NOTA***

*I gradini nei diagrammi pressione - corrente sono una caratteristica del modo di funzionamento del Dual. Quando la corrente assorbita dalla pompa raggiunge determinati valori, l'unità di controllo cambia il valore dell'alta tensione in uscita ad un valore più basso.*

7. Quando si porta la pompa alla pressione atmosferica, usare azoto secco in modo da evitare l'assorbimento di vapore acqueo da parte delle pareti della pompa.

**⚠ PERICOLO!**

Quando la pompa viene utilizzata per il pompaggio di gas tossici, infiammabili o radioattivi, seguire le appropriate procedure tipiche di ciascun gas. Non usare la pompa in presenza di gas esplosivi.

**⚠ PERICOLO!**

Quando è installato il riscaldatore, non toccare la pompa durante le operazioni di riscaldamento e di raffreddamento. L'elevata temperatura può causare lesioni alle persone.

**☞ATTENZIONE!**

Non avvicinare dispositivi elettronici alla pompa. Il campo magnetico attorno ad essa può provocare dei malfunzionamenti dei dispositivi stessi.

## MANUTENZIONE

Le pompe della serie VacIon *Plus* non richiedono alcuna manutenzione. Qualsiasi intervento deve essere eseguito da personale autorizzato.

**⚠ PERICOLO!**

Prima di effettuare qualsiasi intervento sulla pompa scollegarla dall'alta tensione.

Qualora una pompa dovesse essere rottamata, procedere alla sua eliminazione nel rispetto delle normative nazionali specifiche.

**SMALTIMENTO**

**Significato del logo "WEEE" presente sulle etichette**
Il simbolo qui sotto riportato applicato in ottemperanza alla direttiva CE denominata "WEEE".
Questo simbolo **(valido solo per i paesi della Comunità Europea**) indica che il prodotto sul quale è applicato, NON deve essere smaltito insieme ai comuni rifiuti domestici o industriali, ma deve essere avviato ad un sistema di raccolta differenziata.
Si invita pertanto l'utente finale a contattare il fornitore del dispositivo, sia esso la casa madre o un rivenditore, per avviare il processo di raccolta e smaltimento, dopo opportuna verifica dei termini e condizioni contrattuali di vendita.

## ALLGEMEINE HINWEISE

Dieses Gerät ist für den professionellen Gebrauch bestimmt. Vor dem Gebrauch soll der Benutzer dieses Handbuch sowie alle weiteren von Varian mitgelieferten Zusatzdokumentationen genau lesen. Bei vollständiger bzw. teilweiser Nichtbeachtung der enthaltenen Hinweise, unsachgemäßem Gebrauch durch ungeschultes Personal, nicht autorisierten Eingriffen und Mißachtung der nationalen Bestimmungen übernimmt Firma Varian keinerlei Haftung.
Die Pumpen der Serie VacIon *Plus* sind Ionenpumpen, die aufgrund ihrer Reinheit, ihrer Fähigkeit, alle Arten von Gas zu pumpen, und ihres vibrations- und wartungsfreien Betriebes, allgemein für Ultrahochvakuumanwendungen zum Einsatz kommen.
In den folgenden Abschnitten sind alle erforderlichen Informationen für die Sicherheit des Bedieners bei der Anwendung des Geräts aufgeführt. Detaillierte technische Informationen sind im Anhang "Technical Information" enthalten.
**In dieser Gebrauchsanleitung werden Sicherheitshinweise folgendermaßen hervorgehoben:**

**GEFAHR!**

Die Gefahrenhinweise lenken die Aufmerksamkeit des Bedieners auf eine spezielle Prozedur oder Praktik, die bei unkorrekter Ausführung schwere Verletzungen hervorrufen könnte.

**ACHTUNG!**

Die Warnhinweise vor bestimmten Prozeduren machen den Bediener darauf aufmerksam, daß bei Nichteinhaltung Schäden am Gerät entstehen können.

***ANMERKUNG***

*Die Anmerkungen enthalten wichtige Informationen, die aus dem Text hervorgehoben werden.*

## VOR DER INSTALLATION

Die Pumpe wird in einer speziellen Schutzverpackung geliefert. Eventuelle Transportschäden sind der zuständigen örtlichen Verkaufsstelle zu melden. Beim Auspacken vorsichtig vorgehen, damit die Pumpe nicht fällt oder Stößen oder Vibrationen ausgesetzt wird. Das Verpackungsmaterial ist ordnungsgemäß zu entsorgen. Es ist vollständig recyclebar und entspricht der EG-Richtlinie 85/399 für den Umweltschutz.

**ACHTUNG!**

Um Entgasungsprobleme zu vermeiden, dürfen die Komponenten, die mit dem Vakuum in Kontakt kommen, nicht mit bloßen Händen berührt werden. Stets Handschuhe oder einen anderen geeigneten Schutz tragen.

***ANMERKUNG***

*Die Pumpe kann, wenn sie einfach der Atmosphäre ausgesetzt ist, nicht beschädigt werden. Sie sollte jedoch bis zur Installation an der Anlage geschlossen bleiben, um Verunreinigungen durch Staub zu vermeiden.*

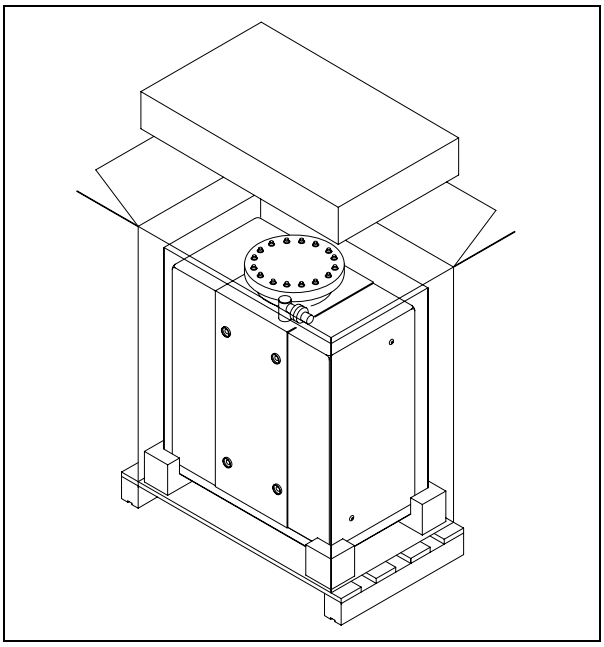

## INSTALLATION

**GEFAHR!**

Die Pumpe kann aufgrund ihres Gewichtes mittels geeigneter Hebe- und Förderzeuge gehandhabt werden.

Die Pumpe darf nicht in Umgebungen installiert und/oder benutzt werden, die ungeschützt vor Witterungsbedingungen (Regen, Frost, Schnee), Staub und aggressiven Gasen sind, und in denen Explosions- und erhöhte Brandgefahr besteht.
Während des Betriebes soll die Umgebungstemperatur zwischen 0°C und +85°C betragen, um die angegebenen technischen Merkmale zu gewährleisten.

**ACHTUNG!**

Die Pumpe soll versiegelt und mit flachgedrücktem Eintrittsschlauch gehalten werden, bis sie für den Anschluß an das System bereit ist.

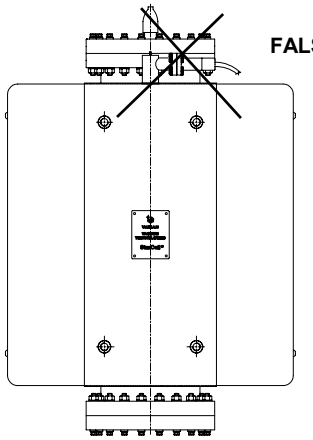


**GEFAHR!**

Um Personenschäden zu vermeiden, darf die Hochspannungsleitung der Pumpe erst angeschlossen werden, wenn die Pumpe im System installiert ist und alle Eintrittsflansche entsprechend angeschlossen oder geschlossen sind.

Der Pumpenbetrieb wird nur durch den Einsatz speziell dafür vorgesehener Varian Steuereinheiten (Dual, MidiVac oder MiniVac) optimiert.

**ACHTUNG!**

Die Einhaltung der Sicherheitsvorschriften beim Gebrauch der Pumpen ist nur bei Verwendung von Varian Steuereinheiten gewährleistet.

Die Pumpe Vaclon *Plus* kann in einer beliebigen Position installiert werden. Aus praktischen Gründen wird sie in der Regel senkrecht mit nach oben gerichtetem Eintrittsflansch montiert. Bei nicht senkrechten Einbaulagen soll die Pumpe auf Montagefüßen aufliegen, die an ihrer Unterseite angebracht werden.

Detaillierte Informationen zur Installation der Pumpe sind dem Anhang “Technical Information” zu entnehmen.

## GEBRAUCH

Sämtliche Hinweise für den korrekten Betrieb der Pumpen Vaclon *Plus* sind im Handbuch der Steuereinheit enthalten. Dieses Handbuch ist vor der Inbetriebnahme genau durchzulesen. Es wird empfohlen, die Pumpe auf einen Druck von $1x10^{-4}$ Torr (mbar) zu bringen, um einen rascheren Anlauf zu gewährleisten. Zu diesem Zweck empfiehlt es sich, keine ölversiegelte mechanische Pumpe zu verwenden. Falls hingegen eine derartige Pumpe benutzt werden muß, soll an der Vakuumleitung eine Falle eingesetzt werden, um den durch die Wasser- und Öldämpfe aus der mechanischen Pumpe erzeugten Druck zu verringern. Es ist zu versuchen, die Zeit auf ein Mindestmaß zu reduzieren, während der die mechanische Pumpe zum System und zur Ionenpumpe geöffnet ist, da sich ihre Dämpfe bei Drücken unter $1x10^{-1}$ Torr (mbar) im System verbreiten und dessen Verunreinigung verursachen. Bei Systemen, die vollkommen ölfrei sein müssen, erweisen sich für den obengenannten Vorgang Turbopumpen als geeigneter. Hygroskopische Ablagerungen und die Absorption von Wasserstoff in der Titanverbindung können die Anlaufzeit verlängern und eine kürzere Standzeit der Pumpe verursachen. Die Ablagerungen der Titanverbindungen absorbieren Wasserdampf, wenn sie der Luft ausgesetzt werden. Dadurch bewirkt beim anschließenden Anlaufvorgang die Aufheizung der Pumpe die Abgabe des Dampfes und eines Teils des zuvor gepumpten Wasserstoffs, so daß sich die Anlaufzeit verlängert.

### Bedienungsschritte

Es ist zu kontrollieren, daß die Steuereinheit in bezug auf die Pumpe richtig gepolt ist: positive Polarität für Dioden Pumpen und negative für StarCell oder Triode Pumpen. Es ist nach dem diesbezüglichen Handbuch vorzugehen, für den Gebrauch der Pumpe sind die folgenden Bedienungsschritte zu beachten:

1. Mit einer Vorvakuumpumpe das System auf einen Mindestanlaufdruck gemäß Tabelle 9 in Abhängigkeit vom Ionenpumpentyp bringen.
2. Die Steuereinheit an eine entsprechende Versorgungsquelle anschließen und einschalten.
3. Die Spannung, die Stromstärke und den Druck beobachten. Wenn der Anlauf bei einem Druck von $5x10^{-2}$ Torr (mbar) erfolgt ist, ist eine Spannung von ca. 300 – 400 V typisch. Ein Stromwert, der sich dem Kurzschlußstromwert der Steuereinheit annähert, weist auf eine Leckstelle an der Pumpe und am System hin. Ein zeitweiliger Anstieg des Vorvakuumdruckes ist während der Anlaufphase normal.
4. Während des Anlaufes der Ionenpumpe soll das Vorvakuumventil geöffnet bleiben, bis ein angemessener Anlaufdruck erreicht ist. Wenn die Spannung der Ionenpumpe nach Schließung des Ventils abfällt, ist das Ventil für eine zusätzliche Vorvakuumpumpung zu öffnen. Sobald der Druck sinkt, steigt die Spannung erneut an und kann das Vorvakuumventil geschlossen werden.
5. Wenn die Spannung 2 – 3 kV erreicht hat, ist die Steuereinheit auf den Status PROTECT zu schalten. Das System verfügt auf diese Weise über einen Selbstschutz vor einem Druckanstieg über $1x10^{-4}$ Torr (mbar), wenn die Pumpe nicht kontrolliert ist. Falls ein solcher Anstieg stattfindet, wird die Steuereinheit automatisch ausgeschaltet.
6. Der Pumpendruck kann auch berechnet werden, indem die Stromstärke abgelesen wird und der abgelesene Wert mittels des Druck-Stromstärke-Diagramms im Anhang “Technical Information” des vorliegenden Handbuches in einen Druckwert umgerechnet wird.

***ANMERKUNG***

*Die Stufen im Druck-Stromstärke-Diagramm sind charakteristisch für die Funktionsweise des Dual. Wenn die Stromaufnahme der Pumpe ein bestimmtes Ausmaß erreicht, ändert die Steuereinheit die ausgangsseitige Hochspannung auf einen niedrigeren Wert ab.*

7. Wenn die Pumpe auf den atmosphärischen Druck gebracht wird, ist trockener Stickstoff zu verwenden, um die Aufnahme von Wasserdampf durch die Pumpenwände zu verhindern.

**GEFAHR!**

Wenn die Pumpe zur Förderung von giftigen, leicht entflammbaren oder radioaktiven Gasen benutzt wird, sind die für das jeweilige Gas vorgeschriebenen Vorgänge zu befolgen. Die Pumpe nie bei Vorhandensein von explosivem Gas benutzen.

**GEFAHR!**

Wenn die Heizung installiert ist, darf die Pumpe während der Aufheizung und Abkühlung nicht berührt werden. Die hohe Temperatur kann zu Personenschäden führen.

**ACHTUNG!**

Keine elektronischen Geräte in die Nähe der Pumpe bringen. Das darum befindliche Magnetfeld kann zu Funktionsstörungen der Geräte führen.

## WARTUNG

Die Pumpen der Serie Vaclon *Plus* erfordern keine Wartung. Sämtliche Eingriffe dürfen nur von autorisiertem Personal vorgenommen werden.

**GEFAHR!**

Vor Eingriffen an der Pumpe ist diese von der Hochspannungsquelle zu trennen.

Bei eventueller Verschrottung einer Pumpe ist diese entsprechend der einschlägigen nationalen Vorschriften zu entsorgen.

**ENTSORGUNG**

**Bedeutung des "WEEE" Logos auf den Etiketten**

Das folgende Symbol ist in Übereinstimmung mit der EU-Richtlinie WEEE (Waste Electrical and Electronic Equipment) angebracht.

Dieses Symbol (**nur in den EU-Ländern gültig**) zeigt an, dass das betreffende Produkt nicht zusammen mit Haushaltsmüll entsorgt werden darf sondern einem speziellen Sammelsystem zugeführt werden muss.

Der Endabnehmer sollte daher den Lieferanten des Geräts - d.h. die Muttergesellschaft oder den Wiederverkäufer - kontaktieren, um den Entsorgungsprozess zu starten, nachdem er die Verkaufsbedingungen geprüft hat.

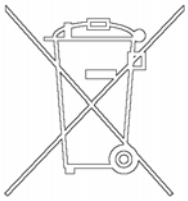

## INDICATIONS GÉNÉRALES

Cet appareillage a été conçu en vue d'une utilisation professionnelle. Il est conseillé à l'utilisateur de lire attentivement cette notice d'instructions ainsi que toute autre indication supplémentaire fournie par Varian avant d'utiliser l'appareil. Varian décline toute responsabilité en cas de non respect total ou partiel des instructions fournies, d'opérations non autorisées, d'utilisation impropre par du personnel non formé ou contraires aux réglementations nationales spécifiques.
Grâce à leur propreté, à leur capacité de pomper tous les types de gaz, à leur fonctionnement sans vibrations et à l'absence d'entretien, les pompes de la série Vacion *Plus* sont des pompes ioniques généralement utilisées pour des applications de vide ultra poussé.
Les paragraphes suivants fournissent toutes les indications nécessaires à garantir la sécurité de l'opérateur pendant l'utilisation de l'appareillage. Des renseignements plus détaillés se trouvent dans l'appendice "Technical Information".
**Cette notice utilise les signes conventionnels suivants:**

**DANGER!**

Les messages de danger attirent l'attention de l'opérateur sur une procédure ou une manoeuvre spéciale dont la mauvaise exécution peut provoquer de graves lésions.

**ATTENTION!**

Les messages d'attention apparaissent avant certaines procédures dont le non respect peut provoquer des dommages irréversibles à l'appareillage.

***NOTE***

*Les notes contiennent des renseignements importants, extrapolés du texte.*

## PRÉPARATION DE L'INSTALLATION

La pompe est fournie dans un emballage de protection spécial; si l'on constate des signes d'endommagement imputables au transport, contacter aussitôt le revendeur local. Pendant l'opération de déballage, veiller tout particulièrement à ne pas laisser tomber la pompe et à ne lui faire subir aucun choc ni aucune vibration. Ne pas abandonner l'emballage dans la nature. Le matériel est entièrement recyclable et il est conforme à la directive CEE 85/399 en matière de protection de l'environnement.

**ATTENTION!**

En vue d'éviter tout problème de dégazage, ne pas toucher à mains nues les éléments devant être exposés au vide. Mettre toujours des gants ou toute autre protection appropriée.

***NOTE***

*La pompe ne peut être endommagée si elle reste simplement exposée à l'atmosphère. Il est quoi qu'il en soit conseillé de ne pas la retirer de son emballage avant le moment de l'installation, afin d'éviter toute pollution due à la poussière.*

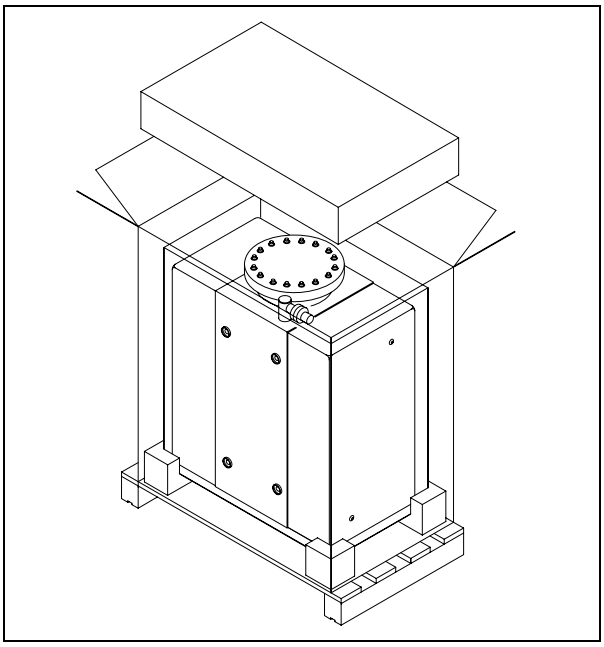

## INSTALLATION

**DANGER!**

À cause de son poids, il est indispensable de se servir des équipements de levage et de manutention pour déplacer la pompe.

Ne pas installer et/ou utiliser la pompe dans des milieux exposés à des agents atmosphériques (pluie, gel, neige), à des poussières, à des gaz de combat ainsi que dans des milieux explosifs ou à fort risque d'incendie. Pendant le fonctionnement, pour respecter les spécifications techniques déclarées la température ambiante doit être comprise entre 0°C et +85°C;

**ATTENTION!**

La pompe doit être conservée scellée avec son tuyan d'entrée aplati jusqu'à ce qu'elle soit prête à être branchée au système.

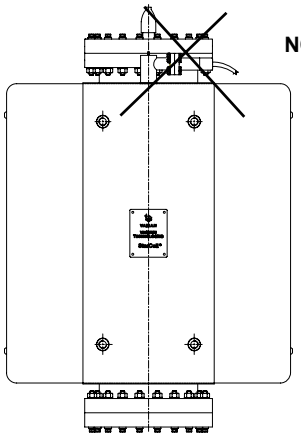


**DANGER!**

Pour éviter toute lésion aux personnes, ne pas brancher la haute tension à la pompe avant que celle-ci soit installée dans le système et avant que toutes les brides d'entrées soient correctement assemblées ou fermées.

Le fonctionnement de la pompe n'est optimisé que si celle-ci est utilisée avec l'une des unités de contrôle Varian spécifiques (Dual, MidiVac ou MiniVac).

**ATTENTION!**

Lors de l'utilisation des pompes, le respect des normes de sécurité est impérativement subordonné à l'emploi des unités de contrôle Varian.

La pompe Vaclon *Plus* peut être installée dans toutes les positions. Par facilité elle est généralement montée en position verticale avec la bride d'entrée en partie haute. Pour toute installation différente de la position verticale, la pompe doit reposer sur ses pieds de montage placé sur le fond.
Pour plus de détails sur l'installation de la pompe, consulter l'appendice "Technical information".

## UTILISATION

Toutes les instructions pour le fonctionnement correct de la pompe Vacion *Plus* sont fournies dans la notice de l'unité de contrôle. Il est conseillé de lire attentivement cette notice avant d'utiliser la pompe. Il est recommandé de porter la pompe à une pression de $1x10^{-4}$ Torrs (mbars) de façon à obtenir un démarrage plus rapide. Pour ce faire il est préférable de ne pas utiliser une pompe mécanique scellée à l'huile mais au cas où il serait nécessaire d'utiliser une telle pompe, il est recommandé d'introduire un dispositif de retenue le long de la ligne de vide afin de réduire la pression due aux vapeurs d'eau et d'huile engendrées par la pompe mécanique. Essayer de réduire au minimum le temps où la pompe mécanique est ouverte vers le système et vers la pompe ionique car ses vapeurs se répandent dans le système à des pressions inférieures à $1x10^{-1}$ Torrs (mbars) causant une contamination de celui-ci. Dans les systèmes où l'huile doit être complètement absente, il est préférable d'effectuer ladite opération à l'aide d'une pompe Turbo. Des dépôts hygroscopiques et l'absorption d'hydrogène dans le composé de titane peuvent provoquer, par effet du vieillissement de la pompe, l'allongement du temps de démarrage. Pendant l'exposition à l'air, le dépôt du composé de titane absorbe de la vapeur d'eau et cette action a pour conséquence qu'au démarrage suivant le chauffage de la pompe entraînera la dispersion de la vapeur et d'une partie de l'hydrogène pompée précédemment ce qui aura pour effet d'allonger le temps de démarrage.

### Procédure d'utilisation

Contrôler que la polarité de l'unité de contrôle soit correcte pour la pompe: polarité positive pour les pompes Diode et négative pour les pompes StarCell et Triode. Se reporter au manuel correspondant et observer la procédure suivante pour l'utilisation de la pompe:

1. A l'aide d'une pompe de pré-vide, porter le système à une pression minimale de démarrage en suivant le tableau de la page 9 et en fonction du type de pompe ionique.
2. Brancher l'unité de contrôle à une source d'alimentation appropriée et l'allumer.
3. Contrôler la tension, le courant et la pression. Lorsque la mise en route est effectuée à une pression de $5x10^{-2}$ Torrs (mbars) la tension est généralement d'environ 300 - 400 V. Une valeur de courant proche du courant de court-circuit de l'unité de contrôle révèle l'existence d'une fuite dans la pompe et dans le système. Au cours de la phase de démarrage, un accroissement momentané de la pression de pré-vide est normal.
4. Laisser la soupape de pré-vide ouverte pendant le démarrage de la pompe ionique tant qu'une pression de démarrage appropriée n'a pas été atteinte. Si la tension de la pompe ionique descend après la fermeture de la soupape, la rouvrir pour un pré-pompage supplémentaire. Dès que la pression commence à diminuer, la tension augmente à nouveau et la valve de pré-vide peut être fermée.
5. Lorsque la tension a atteint 2 - 3 kV, mettre l'unité de contrôle en état de PROTECT. Le système sera ainsi protégé contre toute augmentation de pression au-delà de $1x10^{-4}$ Torrs (mbars) lorsque la pompe n'est pas contrôlée. Si une telle augmentation devait être enregistrée, l'unité de contrôle s'éteindrait automatiquement.
6. La pression de la pompe peut également être calculée en relevant le courant et en convertissant la lecture en pression à l'aide du diagramme pression-courant illustré dans l'appendice "Technical Information" de ce manuel.

***NOTE***

*Les paliers du diagramme de pression – courant sont une caractéristique du mode de fonctionnement du Dual. Lorsque le courant absorbé par la pompe atteint des valeurs déterminées, l'unité de contrôle porte la valeur de haute tension en sortie à une valeur inférieure.*

7. Lorsque l'on porte la pompe à la pression atmosphérique , utiliser de l'azote sec de façon à éviter que les parois de la pompe n'absorbent de la vapeur aqueuse.

**DANGER!**

Lorsque la pompe est utilisée pour le pompage de gaz toxiques, inflammables ou radioactifs, suivre les procédures appropriées à chaque gaz. Ne pas utiliser la pompe en présence de gaz explosifs.

**DANGER!**

Lorsque le réchauffeur est installé, éviter de toucher la pompe pendant les opérations de chauffage et de refroidissement. La température élevée peut provoquer des brûlures.

***ATTENTION!***

Ne pas approcher de dispositifs électroniques de la pompe. Le champ magnétique environnant cette dernière peut entraîner des dysfonctionnements desdits dispositifs.

## MAINTENANCE

Les pompes de la série Vacion *Plus* ne demandent aucun entretien. Toute intervention doit être exécutée par un personnel agréé.

**DANGER!**

Avant toute intervention sur la pompe, la débrancher de la haute tension.

En cas de mise au rebut d'une pompe, procéder à son élimination dans le respect des normes nationales en vigueur.

**MISE AU REBUT**

**Signification du logo "WEEE" figurant sur les étiquettes**
Le symbole ci-dessous est appliqué conformément à la directive CE nommée "WEEE".
Ce symbole **(uniquement valide pour les pays de la Communauté européenne)** indique que le produit sur lequel il est appliqué NE doit PAS être mis au rebut avec les ordures ménagères ou les déchets industriels ordinaires, mais passer par un système de collecte sélective.
Après avoir vérifié les termes et conditions du contrat de vente, l'utilisateur final est donc prié de contacter le fournisseur du dispositif, maison mère ou revendeur, pour mettre en œuvre le processus de collecte et mise au rebut.

## GENERAL INFORMATION

This equipment is destined for use by professionals. The user should read this instruction manual and any other additional information supplied by Varian before operating the equipment. Varian will not be held responsible for any events occurring due to non-compliance, even partial, with these instructions, improper use by untrained persons, non-authorized interference with the equipment or any action contrary to that provided for by specific national standards.
The Vaclon *Plus* series pumps are ion pumps commonly used to create ultra-high vacuum, due to their cleanliness, ability to pump different gases, and maintenance- and vibration-free operation.
The following paragraphs contain all the information necessary to guarantee the safety of the operator when using the equipment. Detailed information is supplied in the appendix "Technical Information".
**This manual uses the following standard protocol:**

**WARNING!**

The warning messages are for attracting the attention of the operator to a particular procedure or practice which, if not followed correctly, could lead to serious injury.

**CAUTION**

The caution messages are displayed before procedures which, if not followed, could cause damage to the equipment.

***NOTE***

*The notes contain important information taken from the text.*

## PREPARATION FOR INSTALLATION

The pump is supplied in a special protective packing. If this shows signs of damage which may have occurred during transport, contact your local sales office. When unpacking the pump, be sure not to drop it and avoid any kind of sudden impact or shock vibration to it. Do not dispose of the packing materials in an unauthorized manner. The material is 100% recyclable and complies with EEC Directive 85/399.

**CAUTION**

In order to prevent outgassing problems, do not use bare hands to handle components which will be exposed to vacuum. Always use gloves or other appropriate protection.

***NOTE***

*Normal exposure to the environment cannot damage the pump. Nevertheless, it is advisable to keep it closed until it is installed in the system, thus preventing any form of pollution by dust.*

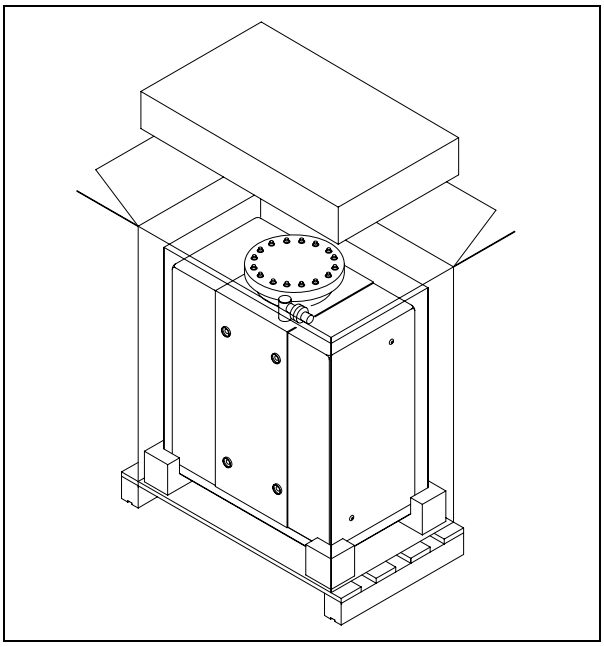

## INSTALLATION

**WARNING!**

The pump is heavy and must be handled by means of suitable moving and handling tools.

Do not install or use the pump in an environment exposed to atmospheric agents (rain, snow, ice), dust, aggressive gases, or in explosive environments or those with a high fire risk. During operation, to obtain the specified operation, the ambient temperature must be between 0 °C and +85 °C.

**CAUTION**

The pump should be kept sealed with its pinch-off tubulation until it is ready for attachment to the vacuum system.

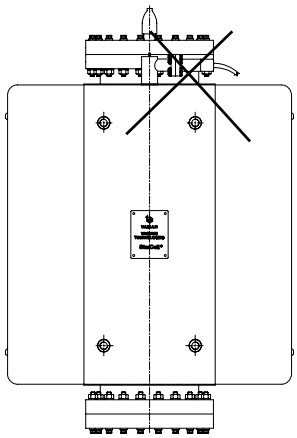


**WARNING!**

To avoid injury, never connect the high voltage to the pump before it is installed into the system and all the inlet flanges are properly connected or blanked off.

The pump operation is optimized using one of the special Varian controllers (Dual, MidiVac or MiniVac) only.

**CAUTION**

The safety specifications agreement using the pump is guaranteed using the Varian controller only.

The VacIon *Plus* pump can be installed in any position. For convenience, a pump is usually mounted vertically with the inlet up. For mounting other than vertical, the pump should be supported using the mounting feet at the bottom of the pump.
For detailed information about the pump installation, see the appendix “Technical Information”.

## USE

All the instructions for the correct use of the VacIon *Plus* pumps are contained in the control unit manual. Read the manual carefully before using the pump. Rough pumping down to $1x10^{-4}$ Torr (mbar) is recommended for the most rapid starting. Roughing with an oil-sealed mechanical pump is not desirable, but when used, a trap in the roughing line is recommended to reduce pressure due to water vapor and oils from the mechanical pump. Be careful to minimize the time that the mechanical pump is open to the system and ion pump, since mechanical pump vapors will start diffusing into the system at pressures below $1x10^{-1}$ Torr (mbar) and cause contamination. In systems where oils must be completely eliminated, turbopump roughing pumps should be used. Hygroscopic deposits and hydrogen absorption into titanium may cause starting times to increase with age. During exposure to air, the deposits of titanium compound absorb water vapor. In subsequent start ups, pump heating causes release of the water vapor and some previously pumped hydrogen; thus, the starting time may be lengthened.

### Operating procedure

Check that the controller HV polarity is correct for the pump: positive polarity for Diode pumps and negative for StarCell or Triode pumps. Refer to the relevant pump control unit instruction manual and follow the procedure below when operating the pump:

1. With a clean roughing pump, establish a minimum starting pressure in the vacuum system per the table on page 9 for the type of ion pump.
2. Plug the control unit into a suitable power source and switch the power ON.
3. Observe the voltage, current, and roughing pressure. If started at $5x10^{-2}$ Torr (mbar), a controller voltage of approximately 300 to 400 volts is typical. A current value near the short-circuit current of the control unit could indicate that an unconfined flow discharge exists in the pump and system. A temporary rise in roughing pressure will usually be noticed during any starting procedure.
4. Allow the roughing valve to remain open after turning on the ion pump until an adequate starting pressure is reached. If the ion pump voltage drops after closing the roughing valves, reopen the valve for additional rough pumping. As the pressure decreases, the voltage again will rise, and the roughing valve may be closed.
5. When the voltage has increased to 2-3 kV, place the control unit in the PROTECT condition. The system is now automatically protected against pressure increases to $10^{-4}$ Torr (mbar) when the pump is left unattended. If such an increase should occur, the control unit will be turned off automatically.
6. The pressure in the pump can also be determined by reading the current and converting this reading to pressure with the appropriate pressure versus current graph shown in the appendix “Technical Information” of this manual.

***NOTE***

*The steps on the pressure – current charts are a characteristic of the Dual step voltage operation. When the current drawn by the VacIon pump reaches the specified values, the controller will change the high voltage output to a lower applied voltage.*

7. When venting the pump, use dry nitrogen. This will avoid water vapor absorption on the pump walls.

**WARNING!**

When employing the pump for pumping toxic, flammable, or radioactive gases, please follow the required procedures for each gas disposal. Do not use the pump in presence of explosive gases.

**WARNING!**

When the heating element is installed, do not touch the pump during the heating and cooling phases. The high temperature may cause a serious damage.

**CAUTION**

Do not put any electronic device near the pump otherwise the magnetic field around it may cause a device malfunctioning.

## MAINTENANCE

The VacIon *Plus* series pump does not require any maintenance. Any work performed on the pump must be carried out by authorized personnel.

**WARNING!**

Before carrying out any work on the pump, disconnect it from the High Voltage supply.

If a pump is to be scrapped, it must be disposed of in accordance with the specific national standards.

**DISPOSAL**

**Meaning of the "WEEE" logo found in labels**
The following symbol is applied in accordance with the EC WEEE (Waste Electrical and Electronic Equipment) Directive.
This symbol (**valid only in countries of the European Community**) indicates that the product it applies to must NOT be disposed of together with ordinary domestic or industrial waste but must be sent to a differentiated waste collection system.
The end user is therefore invited to contact the supplier of the device, whether the Parent Company or a retailer, to initiate the collection and disposal process after checking the contractual terms and conditions of sale.

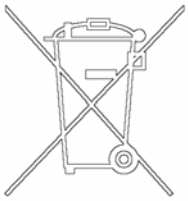

## DESCRIPTION OF THE VACION PUMP

The Varian VacIon *Plus* 500 pumps are ion pumps and are available in four types:

- StarCell
- Triode
- Noble Diode
- Diode

They operate in the pressure range from $10^{-2}$ to below $10^{-11}$ Torr (mbar). Virtually all gases and vapors can be pumped successfully with the ion pump. The pumping speed will vary depending on the system pressure, the gas type, and the applied operating voltage. The latter can be optimized using Varian controllers to achieve the lowest possible operating pressure.

The VacIon *Plus* Triode and StarCell pumps allow starting from as high as $5x10^{-2}$ Torr ($6.6x10^{-2}$ mbar), because ions are prevented from bombarding the system and pump walls at starting pressures, and have high speed for inert gases. The VacIon *Plus* Diode and Noble Diode pumps require a lower starting pressure (i.e. $10^{-3}$ Torr (mbar)). The Diode contains more titanium than triode pumps, and thus has a higher hydrogen capacity and longer life.

The tantalum in the Noble Diode pump enhances the noble gas pumping capacity, although it somewhat reduces the high getterable gas pumping speed that the standard diode pump provides.

The VacIon *Plus* StarCell is the latest variation of the Triode configuration. Its patented design makes this ion pump the only one that can handle a high amount of Noble Gases (better than Noble Diode and Triode) and Hydrogen (comparable to the Diode).

A positive polarity, high voltage supply is required to operate Diode and Noble Diode pumps. A negative polarity high voltage supply is required to operate Triode and StarCell pumps since the anode is grounded and the cathode is held at negative potential.

The inlet ConFlat flange is a 8” (NW 150).

Fig. 1 shows the VacIon *Plus* 500 pump, Fig. 2 shows the main assemblies of the pump.

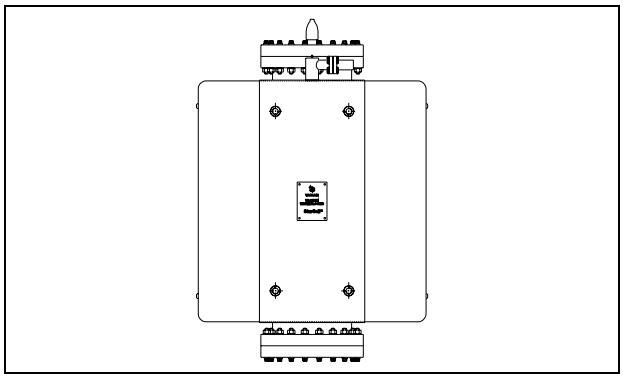

*Fig. 1 - VacIon Plus 500 pump*

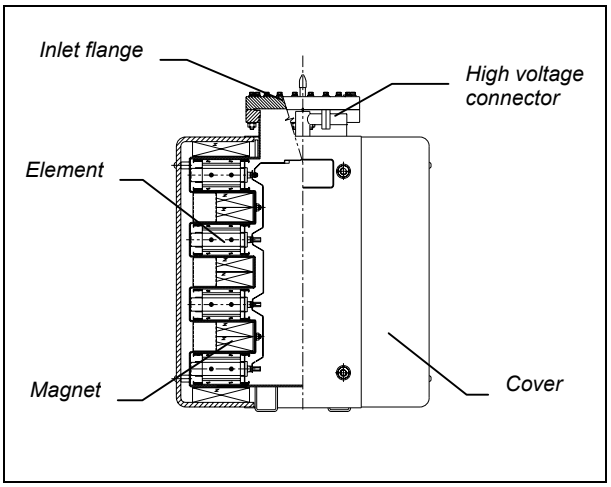


*Fig. 2 - Pump main assemblies*

## TECHNICAL SPECIFICATION

The following table details the main technical specifications of the VacIon *Plus* 500 pumps.

| SPECIFICATION | MODEL | | | |
|---|---|---|---|---|
| | STARCELL | TRIODE | NOBLE DIODE | DIODE |
| Nominal pumping speed for Nitrogen (*) (l/s) | 410 | 390 | 440 | 500 |
| Operating life at $1x10^{-6}$ mbar (hours) | 80,000 | 35,000 | 50,000 | 50,000 |
| Max starting current | 400 mA | | | |
| Max baking current | 50 mA | | | |
| Protect current | 100 mA | | | |
| Operating voltage (max) | -7000 Vdc +/- 10% | | +7000 Vdc +/- 10% | |
| Maximum starting pressure (mbar) | $\leq 1x10^{-2}$ | | $\leq 1x10^{-3}$ | |
| Ultimate pressure | Below $10^{-11}$ | | | |
| Inlet flange | 8” CFF (NW 150) AISI 304 ESR | | | |
| Internal volume (litres) | 36.2 | | | |
| Maximum baking temperature (°C) | 350 | | | |
| Temperature limits (°C): Pump<br>Magnet<br>Flange | 400<br>350<br>500 | | | |
| Material: Body | AISI 304 SST | | | |
| Cathode | Titanium | | Titanium/ Tantalum | Titanium |
| Anode | AISI 304 SST | | | |
| Magnet | Ferrite | | | |
| Weight, lbs (kg) | 264 (120) | | | |

*(*) Tested according to ISO/DIS 3556-1-1992*

Figures 3 to 13 show the pumping speed vs pressure diagrams for saturated and unsaturated pumps and the pressure vs current diagrams for the same pump. The diagrams are for pumps controlled by means of a Dual controller.

The pumping speed of a newly regenerated (i.e. baked) sputter ion pump decreases during operation until it reaches a stabilized level known as "saturation" (nominal pumping speed). To saturate the VacIon *Plus* 500 pumps, it normally requires an amount of gas equal to 15 Torr-litres (mbar-litres). Consequently, pumps can operate for extended periods of time at low pressures in the non-saturated state, if they are properly conditioned.

## VACION *PLUS* 500 STARCELL

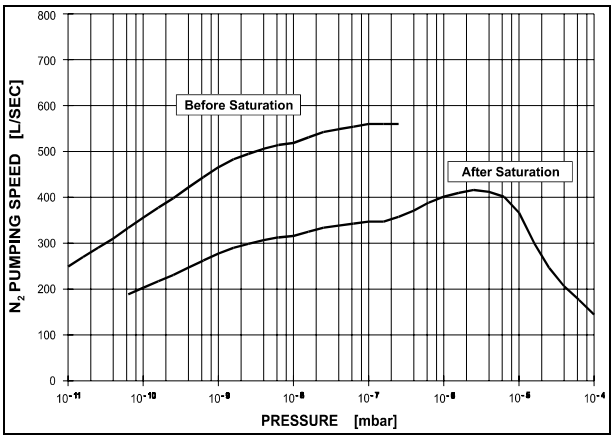


*Fig. 3 - Pumping speed vs pressure for Nitrogen*

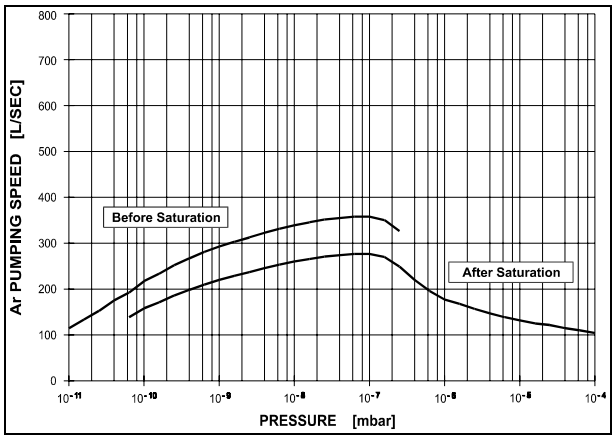


*Fig. 4 - Pumping speed vs pressure for Argon*

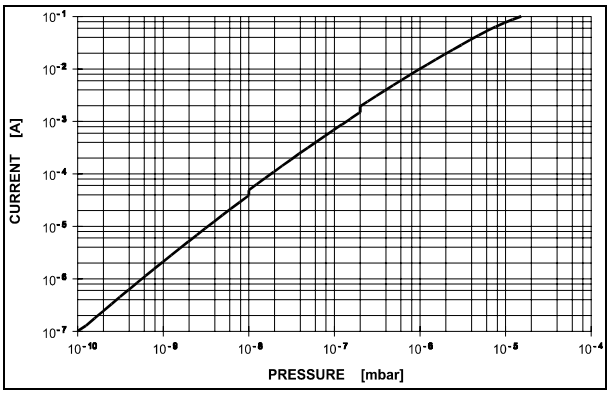


*Fig. 5 - Pressure vs current diagram*

## VACION *PLUS* 500 DIODE

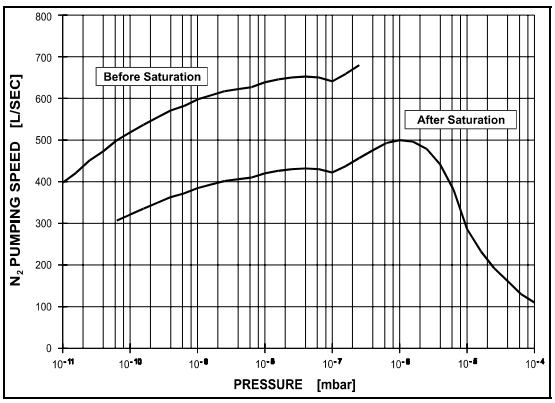


*Fig. 6 - Pumping speed vs pressure for Nitrogen*

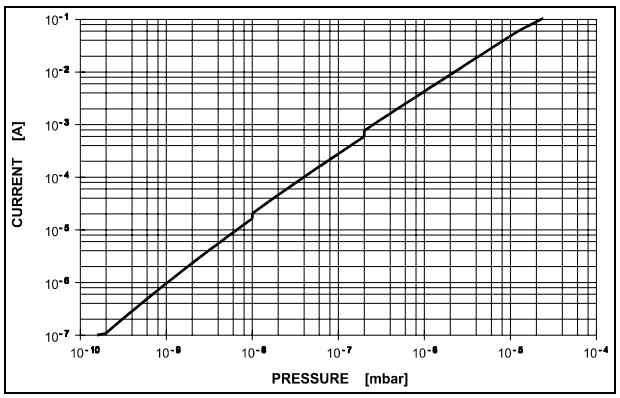


*Fig. 7 - Pressure vs current diagram*

## VACION *PLUS* 500 TRIODE

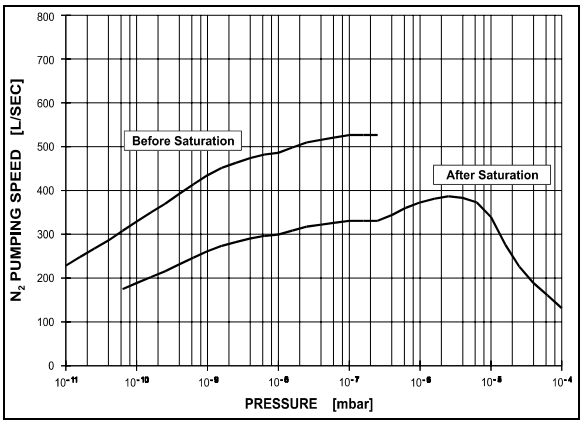


*Fig. 8 - Pumping speed vs pressure for Nitrogen*

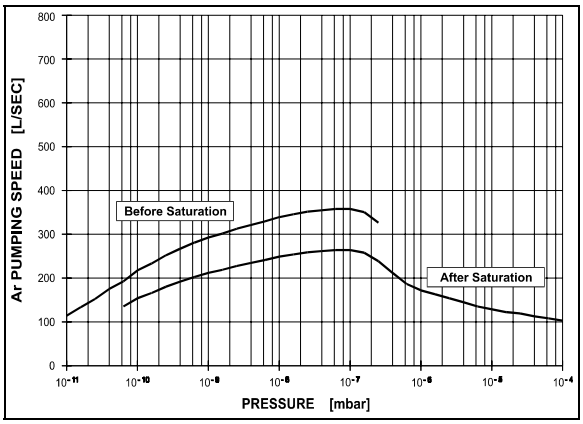


*Fig. 9 - Pumping speed vs pressure for Argon*

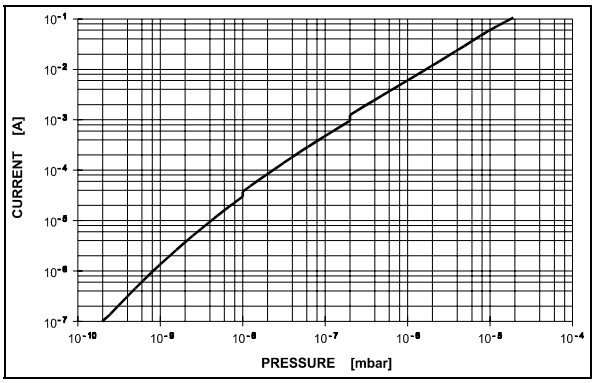


*Fig. 10 - Pressure vs current diagram*

## VACION *PLUS* 500 NOBLE DIODE

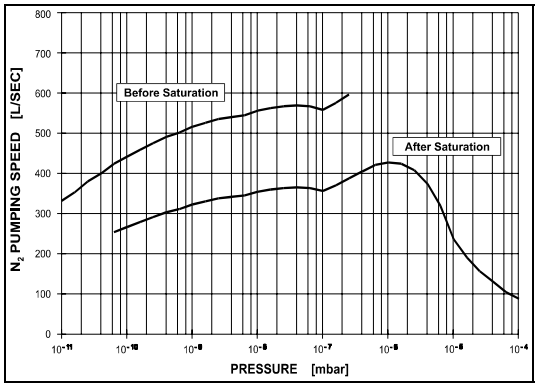


*Fig. 11 - Pumping speed vs pressure for Nitrogen*

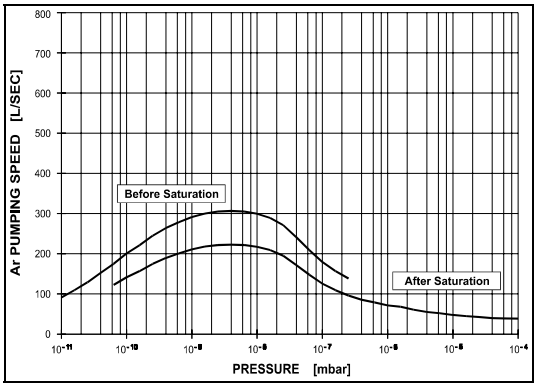


*Fig. 12 - Pumping speed vs pressure for Argon*

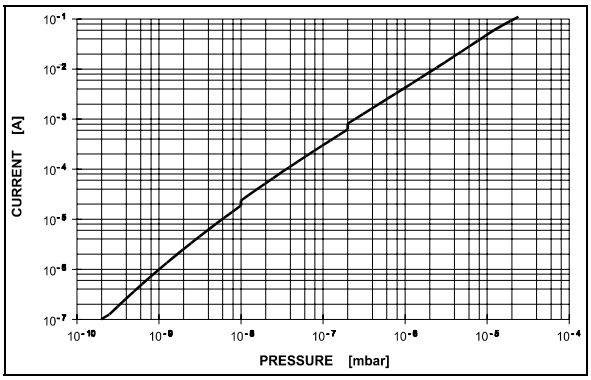


*Fig. 13 - Pressure vs current diagram*

## OUTLINE DRAWING

The following figure shows the outline drawing for the VacIon *Plus* pump.

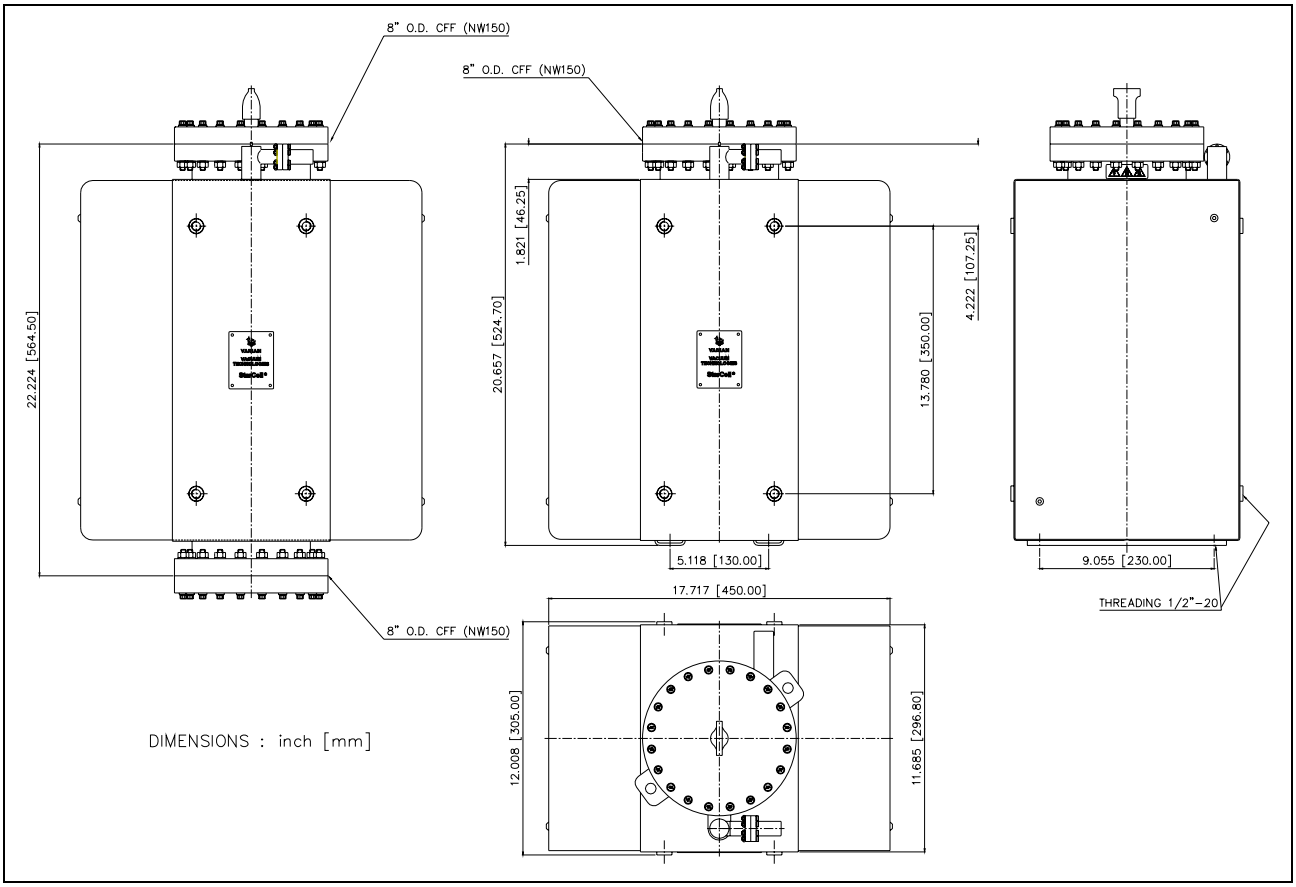


*Fig. 14 - VacIon Plus pump outline drawing*

## STRAY MAGNETIC FIELD

Curves of stray magnetic field strength along the centre line of the pump and in the plane of the flange as a function of distance from the pump are shown in Figs. 16, 17, 18, 19 and 20, where Bx is the magnetic field along X axis, By is along Y axis and Bz is along Z axis.

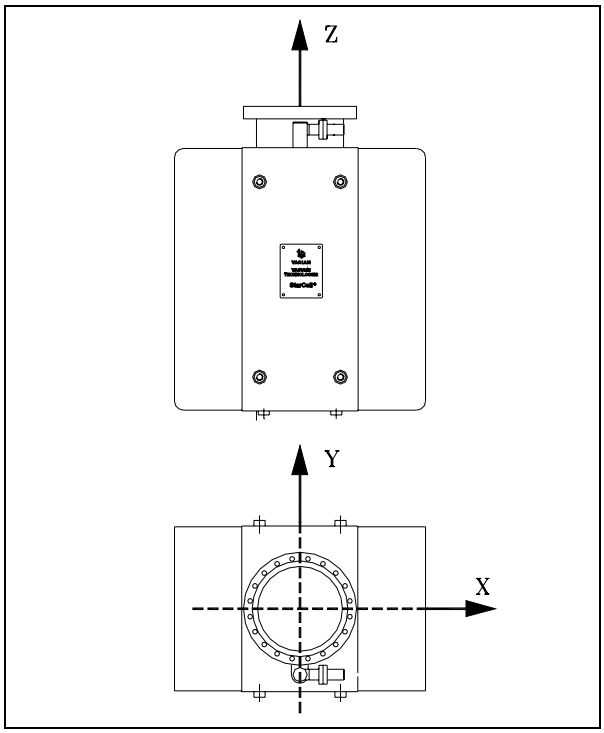


*Fig. 15 - VacIon Plus pump axis identification*

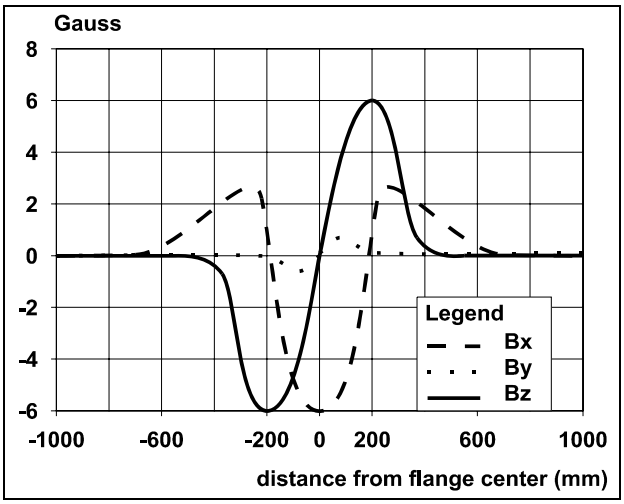


*Fig. 16 - Stray magnetic field from flange along X axis (z = 0 mm)*

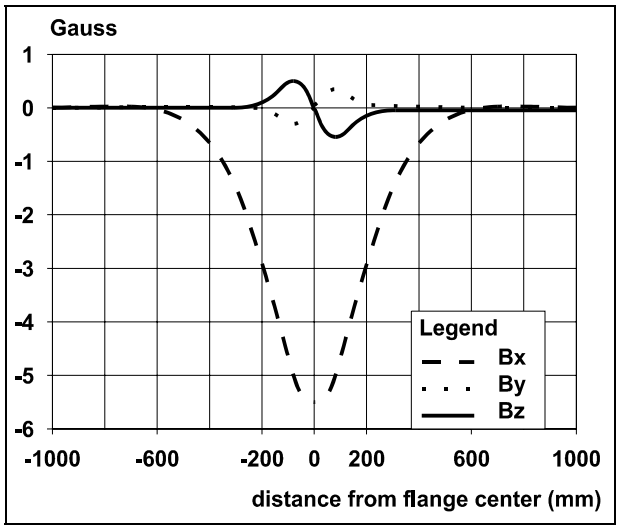


*Fig. 17 - Stray magnetic field from flange along Y axis (z = 0 mm)*

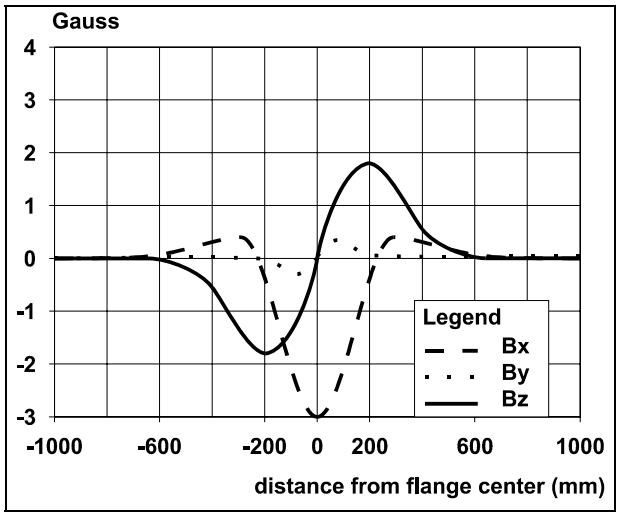


*Fig. 18 - Stray magnetic field from flange along X axis (z = 100 mm)*

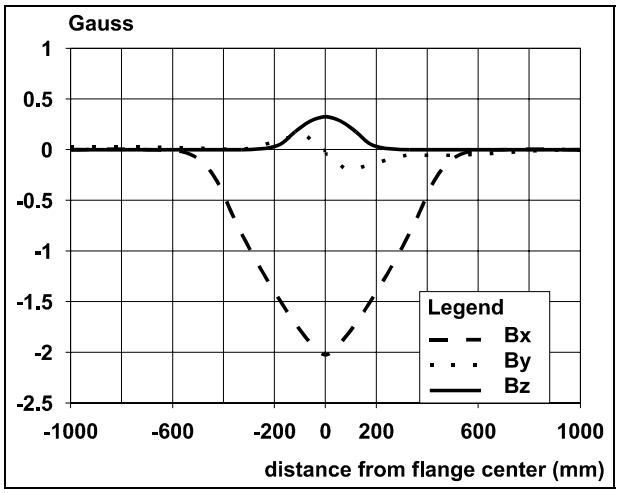


*Fig. 19 - Stray magnetic field from flange along Y axis (z = 100 mm)*

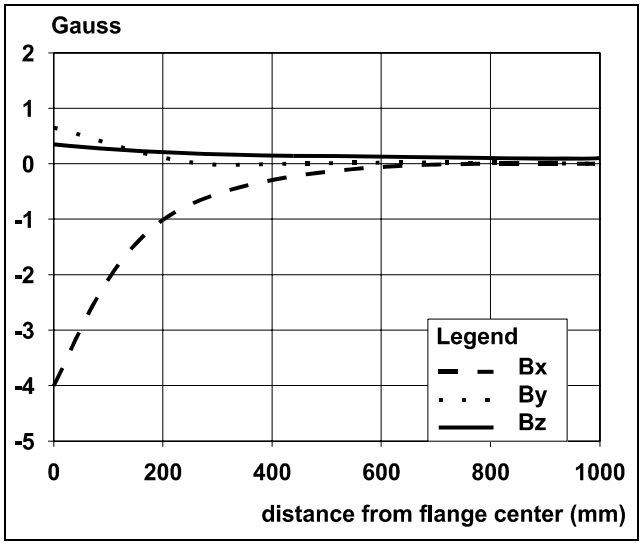


*Fig. 20 - Stray magnetic field from flange along Z axis*

## VACION PLUS PUMP INSTALLATION

### Inspection procedure

VacIon *Plus* pumps are evacuated, baked out, sealed and leak-checked at below $1x10^{-10}$ Torr (mbar) prior to shipping. The following information and procedures can be used to evaluate the vacuum integrity of a VacIon *Plus* pump before installation.

### Visual inspection

Inspect the pump and magnet for physical damage which may have occurred during shipment. Inspect the pinch-off seal. If it is open, the pump is at atmospheric pressure.

**WARNING!**

The pinch-off seal is extremely sharp. Be careful.

A VacIon *Plus* pump that has been exposed to atmosphere during shipment, or while in storage, will operate properly if it has not been damaged.

The pump is not harmed by such exposure, although it is good practice to keep it under vacuum when not in use to exclude dust and the accumulation of water vapor from the environment.

**Vacuum evaluation**

The ion pump is shipped in an evacuated condition. Before removing the shipping flange for installation on a vacuum system, it is recommended that the pump be started briefly to verify vacuum integrity and proper operation.

To verify the vacuum integrity of the new pump before venting:

1. Connect the pump to the control unit as directed in the instruction manual of the control unit.

---

⚠ **WARNING!**

The high voltage which is present in the ion pump from the control unit can cause severe injury or death.

---

2. With the main power switch in the OFF position, plug the control unit into a suitable power source.

3. Turn the power to ON.

4. Observe the reading for an indication of one of the following conditions:

   – If the pump is free of leaks and is at a low pressure, the pressure indication shall within 10 minutes fall to or below the $10^{-8}$ Torr (mbar) range as the volume of gas is pumped.

   – If the pressure inside the pump is at or near atmospheric level, an arc may strike inside the high voltage feedthrough giving a popping sound and the pump current will fluctuate. If this occurs, turn the power OFF immediately.

5. If the vacuum integrity has been lost, the pump should be leak-checked with a mass spectrometer leak detector before installation on the system.

**Short circuits**

If there is a short circuit between the anode and cathodes in the pump (or cathode to pump body), the short-circuit current of the control unit will be drawn and low voltage will be indicated. If a short circuit exists in the control unit or high voltage cable and connector, low voltage will also be observed when the high voltage connector is disconnected from the pump (refer to the control unit manuals). An ohm meter reading on the pump feedthrough may not be effective in finding a short. Short circuits may be caused by mechanical shock to the pump. If the pump is shorted, contact Varian.

## TYPICAL INSTALLATION

A typical installation is shown in Fig. 21 and consists of:

1. VacIon Plus pump.

2. A Valve to seal off the pump from the rest of the system (if required).

3. The control unit.

4. A clean roughing pump (i.e. turbo).

5. A thermocouple gauge capable of indicating pressure from atmosphere to $10^{-3}$ Torr/mbar range.

6. A valve to seal off the roughing pump from the vacuum chamber. Roughing lines, are usually made of stainless steel or copper tubing, or other low vapour pressure material.

7. High voltage cable.

8. Backing pump (diaphragm or scroll).

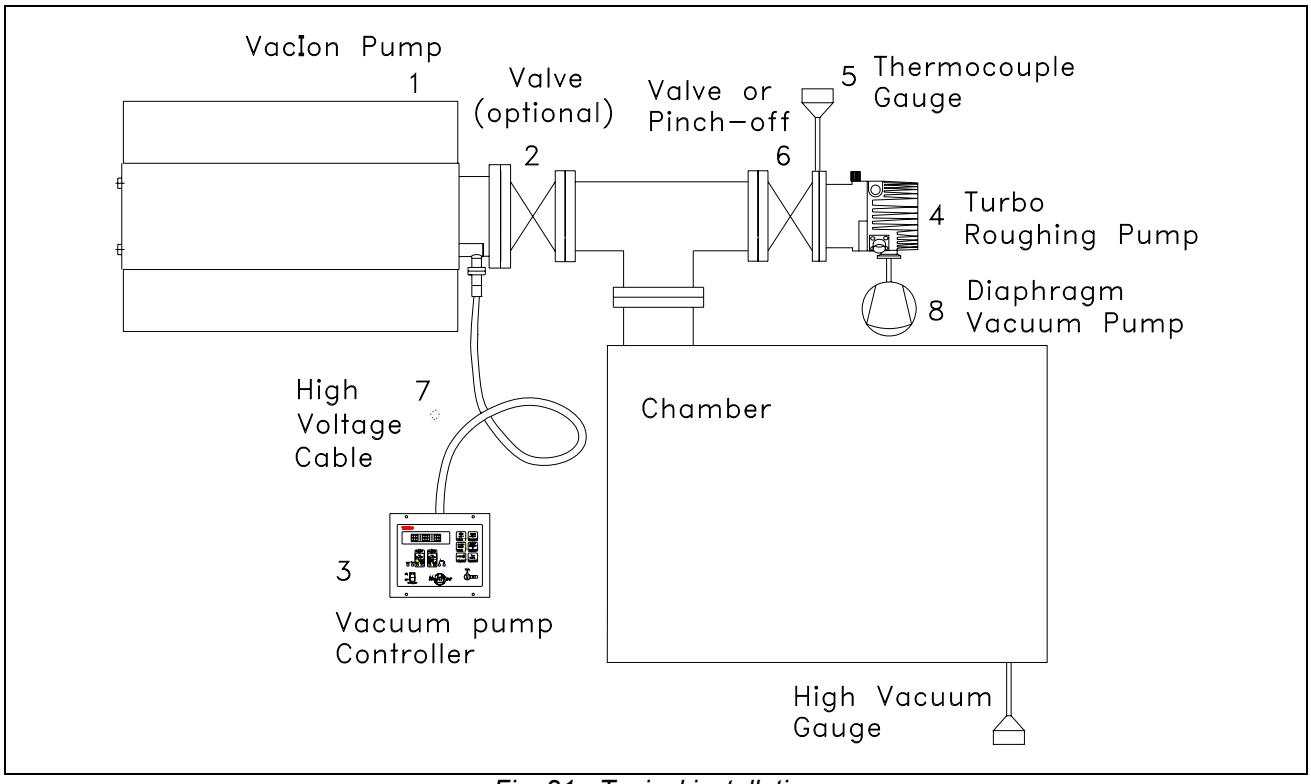


*Fig. 21 - Typical installation*

**INLET FLANGE CONNECTION**

The pump should be mounted allowing a sufficient clearance for installation and removal of the high voltage connector.

To achieve good performance of the ion pump at low vacuum pressure, it is critical that atmospheric pollution and dust must not enter the pump during venting. This type of contamination will not be removed by the standard high temperature bake procedure and may degrade ion pump performance. The pump should be kept sealed with its pinch-off tubulation until it is ready for attachment to the vacuum system. Before venting the pump, consult the inspection procedure (see preceding paragraph).

Vent the ion pump by opening the pinch-off tubulation in a clean area free from smog, dust, pollen, etc. Venting with dry nitrogen gas is further recommended. This can be done by placing a clean polyethylene bag over the ion pump flange. Small pumps can be placed inside of the bag. Purge the bag with clean, dry nitrogen for several minutes, then reach into the bag and release the internal vacuum using pliers to open the copper tube pinch-off.

☞ **CAUTION**

Do not open the pinch off-seal with a saw or grinder. These methods will cause metal particles to be drawn into the pump by the inrushing air as the pump is opened.

⚠ **WARNING!**

The pinch-off seal is extremely sharp. Be careful when opening. Watch your fingers.

Use appropriate procedures to maintain the clean condition of the pump and vacuum system.

Unscrew the main flange bolts. Remove the Con-Flat flange and the copper gasket plate. Some particles of copper oxide may adhere to the outer edge of the flange gasket. Be careful not to allow them or any other foreign materials to fall into the pump.

Connect the ion pump to the vacuum chamber with a short length and large diameter tubulation in order to retain as much pumping speed as possible. Proceed as follows:

1. Inspect the mating flanges for cleanliness and absence of scratches on the knife edge.

2. Place a new copper gasket between pump flange and vacuum chamber flange.

3. Bolt mating flanges of the pump to the chamber with the screws provided with the ion pump. For flanges over NW 35 (2.75" o.d.) also mount washers below the nuts and screw heads.

**NOTE**

*Lubrication is essential to prevent galling of the nut and screw after bakeout.*

4. Use silver-plated screws or apply high temperature lubricant to the screw threads. Lubrication simplifies sealing and disassembly. A recommended lubricant is Fel-Pro C-100.

5. Attach the nuts and tighten each one to 4.5 - 8 ft.-lbs (0.6 - 1.1 Kgm) of torque. After tightening a nut, always tighten the opposite nut with respect to the center of the flange. This will partially close the gap between the flange faces.

6. Repeat the sequential tightening for two more cycles.

7. Continue tightening the bolts until the flange faces meet and a pronounced increase in torque is felt.

Note that it's not possible to install the screws from the lower side, but only from the upper side of the flange. To allow complete flexibility in the installation, a stud mounting kit is available (see Fig. 22). For ordering information refer to the "VacIon *Plus* pump replacement parts and accessories" paragraph.

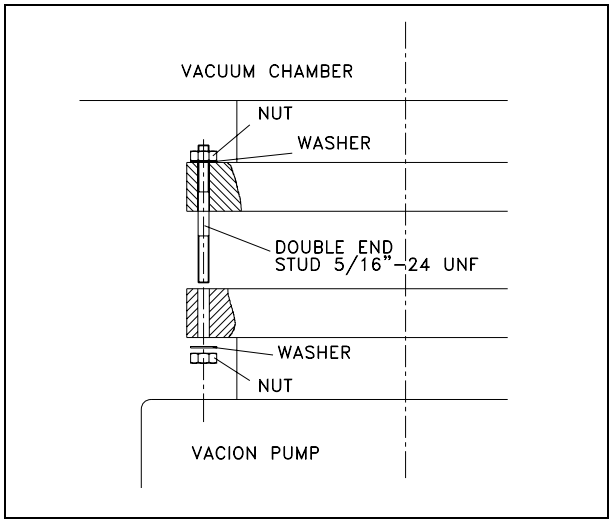


*Fig. 22 - Stud mounting kit*

## CONTROL UNIT CONNECTION

**WARNING!**

The high voltage present in the high voltage cable which connects the control unit to the ion pump, can cause severe injury or death. Before mounting the high voltage connector of the cable on the pump high voltage feedthrough, or before removing it, be sure the main power is removed from the control unit.

**WARNING!**

To avoid injury, never connect the high voltage to the pump before it is installed into the system and all the inlet flanges are properly connected or blanked off.

**WARNING!**

Before removing the high voltage connector of the cable from the control unit, be sure the main power is removed from the control unit. Wait at least 10 seconds after removing the main power from the control unit, to allow capacitors to discharge completely.

To disconnect the coaxial high voltage cable from the controller, slide the safety locking sleeve (very little sleeve travel is required) from the control unit and at the same time pull on the male end of the cable connector to remove it from the socket on the control unit.

## SAFETY INTERLOCK

The VacIon *Plus* pump feedthrough in conjunction with the cable P/N 929-0705, when used with the Varian MidiVac and DUAL control units, allows the operation of the "High Voltage Cable Safety Interlock" feature.

When the high voltage cable connector is disconnected from the VacIon *Plus* pump feedthrough, the high voltage is automatically switched off by the control unit

## HEATER INSTALLATION

The heating element (Fig. 23) is composed of two plates to be fixed to the pump case.

**NOTE**

*It is advisable to make a 10 - 15 minutes initial operation of the heater in a ventilated room to allow the evaporation of residual internal elements.*

To install the element proceed as follows (Fig. 24):

1. Remove the pole pieces;

2. Position the heating plate (1) inserting the threaded pins positioned on the pump jacket into the holes of the plate. Be sure that the written heating plate side is towards you;

3. Position the other heating plate (2) in the same way as the heating plate (1);

4. Reinstall the pole pieces;

5. Position the connection box (3) on the upper side of the pump in an oppose position of the HV feedthrough with respect to the flange, and fix it to the pump case.

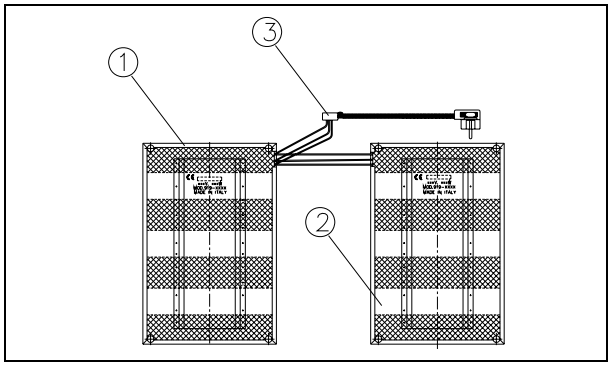


*Fig. 23 - Heating element*

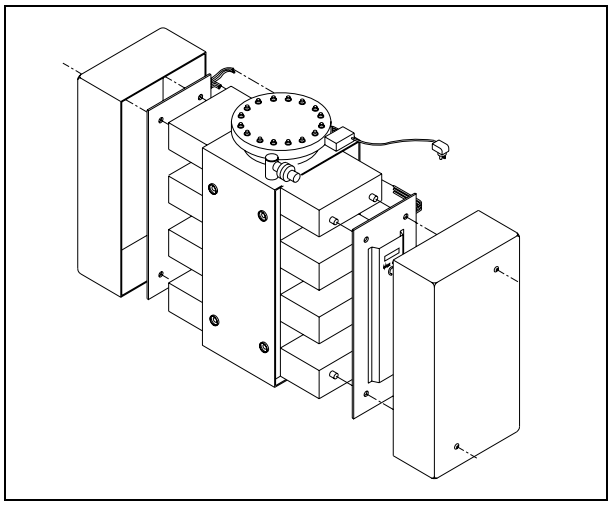

*Fig. 24 - Heating element installation*

**HEATER REPLACEMENT**

To replace the heater element proceed as follows:

1. Disconnect the pump from the high voltage;
2. Disconnect the heater element from the main supply;
3. Disconnect the heater plates from the pump case;
4. Disconnect the heater connection box from the upper side of the pump;
5. Install the new heater element as described in the previous paragraph “HEATER INSTALLATION”.

**BAKEOUT OPERATION**

When a VacIon pump does not reach the desired base pressure, and there are no leaks, it is necessary to bake the system. This is done by heating the pump and all the components in the system, and is generally required to achieve base pressures less than $10^{-8}$ Torr (mbar).

1. Heat the pump body and the system with a bakeout oven unit or heating strips to temperatures between 150 °C and 250 °C (250 °C is the maximum allowable for most bakeable high voltage cables). This temperature is high enough to degas the pump surfaces of water vapor without damaging the magnet and high voltage connector. Note that the system components must be compatible with the bakeout temperature. The heating must be approximately even on all surfaces or evaporated water will condence on the colder surfaces resulting in an incomplete bake and preventing achievement of UHV vacuum pressure.
2. Leave the pump control unit on and monitor the pressure. Varian recommends that current during bake not exceed 50 mA; if this value is exceeded, turn the bakeout off and then on again when low pressure is restored.
   To control the heaters and to monitor the high pressure limit during bakeout, an automatically controlled relay may be used.
3. Bake the VacIon *Plus* pump for at least 24 hours. Longer bakeout periods are recommended when the pump has been used with heavy gas loads or when UHV pressure, $10^{-9}$ Torr (mbar) or less is desired.
4. As the pump and system cool down to room temperature, a drop in pressure should be observed.

Note that the ion pump can be also baked when switched off, into an external turbo pump through a bakeable isolation valve. This method gives the best vacuum performance.

**Bakeout of VacIon pump with the integral heaters**

1. The integral heaters are to be powered with the appropriate voltage. (Please refer to the inscription on the heaters to apply correct voltage).
2. The integral heaters are designed to provide a temperature of 250 °C to 300 °C when the pump is wrapped in a 3-fold aluminum foil.

***NOTE***

*A three-layer foil wrapping is advisable and sufficient to achieve full bakeout/regeneration if the standard European heaters (220 Vac) are operated at 240 Vac, thus preventing overheating.*

3. Bakeout the VacIon pump for 24 hours. If the pump is used in heavy gas load applications, it is recommended to bakeout the pump for a longer period.
4. Wait until the pump cools down to room temperature and recovers its base pressure before using it in the application.

**WARNING!**

Do not touch the pump during the heating and cooling phases. The high temperature may cause a serious damage.

## OPERATING PROCEDURE

1. Using a clean roughing pump, evacuate the system to a minimum starting pressure per the chart on pages 10 and 11 for the type of ion pump. $10^{-4}$ Torr (mbar) or less is recommended. A turbomolecular roughing pump is recommended.
2. When starting an ion pump, a slight increase in vacuum pressure is normal as the internal components are heated and outgassed. If possible leave the roughing pump connected to the system while starting the ion pump. This will make the startup faster and easier.
3. Connect the control unit to a suitable power source and switch the power on.
4. Switch on high voltage to the pump and observe the current and voltage. Fastest starting is obtained using a high applied voltage, 7 kilovolts for example. The applied voltage may be reduced later to optimize pumping and achieve the lowest vacuum pressure.
5. If started at $10^{-4}$ Torr (mbar), the voltage will start at approximately 800 volts and increase to full voltage as the pump starts operating. The current will start at several milliamps and slowly decrease to microamps or nanoamps as low vacuum pressure is achieved.
6. When first starting the pump, if the voltage decreases instead of increasing, reduce the vacuum pressure then start the ion pump again.
7. When the pump reaches its full operating voltage, you may close the roughing valve.
8. If the pump does not start after 30 minutes of pumping, see the section PUMP TROUBLESHOOTING.
9. Once the pump reaches its base pressure with stable voltage and current, the ion pump may be baked at high temperature if required per the section titled BAKEOUT OPERATION.
10. To stop the ion pump, simply switch off the high voltage. The pump surfaces will continue to pump for a few minutes depending on the system pressure.
11. When venting the pump use clean, dry nitrogen. This will avoid water absorption on the pump surfaces and make subsequent pump downs easier.

## MAINTENANCE

**WARNING**

The high voltage present in the high voltage cable which connects the control unit to the ion pump, can cause severe injury or death. Before mounting the high voltage connector of the cable on the pump high voltage feedthrough, or before removing it, be sure the main power is removed from the control unit.

Before removing the high voltage connector of the cable from the control unit, be sure the main power is removed from the control unit. Wait at least 10 seconds after removing the main power from the control unit, to allow capacitors to discharge completely.

VacIon *Plus* pumps are maintenance free. In case of life time expiry or premature failure of the pump, please contact your nearest Varian sales/service office for repair.

The VacIon *Plus* 500 pumps are designed with exchangeable high-voltage feedthrough and pump elements.

### Exchange of pumping element

1. Remove the internal high-voltage connections.
2. Remove the element holding brackets.
3. Pull the element out of the pocket and remove it through the inlet flange.
4. Clean the internal part of the pump with the appropriate solvent.
5. Put in the new element through the inlet flange. Make sure that the element is fixed at its rear by the two press-formed buttons of the element pocket, and at its front by the element holding clamp.
6. Reattach the high-voltage connections and test for continuity from the feedthrough.
7. Place a blank flange over the pump inlet and leak-check it with a leak detector.
8. Bake out the blanked off pump while it is operating, and leave it to cool down; then verify that the base pressure is below $10^{-9}$ Torr (mbar).

**Exchange of the high voltage feedthrough.**

CAUTION

The high voltage feedthrough contains a ceramic insulator that can be damaged if excessive force is applied in torque, in bending, or in tension. When installing or removing the feedthrough, the applied torque should not exceed 2 Nm. Rotate the feedthrough gently when making the threaded connection to avoid excessive force.

1. Remove the 6 bolts of the Mini-ConFlat flange connection (see Fig. 25).

2. Remove the cable connection disc.

3. Gently relieve the feedthrough from the metal gasket connection and turn the feedthrough counterclockwise until it is completely detached from the internal high voltage threaded connection.

4. Replace the feedthrough and the copper gasket, making sure that the feedthrough is connected to the pumps internal connector. Check that the feedthrough is not shorted.

5. Bake out the pump while it is operating, and leave it to cool down; then verify that the base pressure is below $10^{-9}$ Torr (mbar).

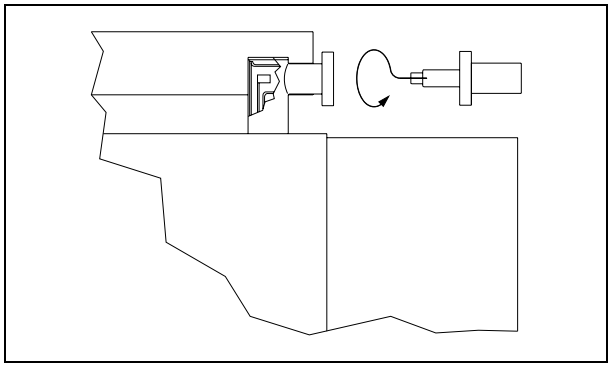

*Fig. 25 - High voltage feedthrough connection*

**Leakage current check**

If the pump current reading is to be used as pressure measurement, check the pump leakage currents as follows:

1. Turn off the pump control unit.

2. Remove the pump magnet.

3. Turn on the pump control unit and wait for current stabilization. The current reading should not be higher than 10 nA at 3 kV. Make sure that the control unit and the high voltage cable leakage current is negligible.

4. If leakage current comes from the pump, perform "high-potting" per the following procedure; then recheck the pump and install the magnet.

5. If it is not possible to "high-pot" the pump, the pressure reading is biased by the leakage current value.

**High-potting**

A constant pump current when no vacuum leak exists is often caused by field emission currents which prevent the use of the pump current as a UHV pressure indicator. To reduce this field emission current, "high potting" should be performed. "High potting" is the term used to describe the application of higher than normal operating voltage (10-12 KV, 20-50 mA) for the purpose of burning off "whiskers" (sharp edges) on the pump cathode.

High potting should be done under vacuum and preferably without pump magnets installed (to reduce the drawn current).

The output of an appropriately sized AC transformer (i.e. neon sign type) may be applied to the pump. High-potting should be done carefully and in voltage steps since uncontrolled arcing inside the pump can cause permanent damage. Slowly increase the applied voltage and watch the current meter for indication of arcing inside the pump as whiskers are burned away. If arcing occurs wait at this voltage until the current is stable again. Then slowly increase voltage again in steps up to a maximum of 12 kV. The current should never exceed 50 mA.

**WARNING!**

Voltages developed in the High Potter power supply are potentially lethal. Use caution during operation and ensure correct grounding connection.

**PUMP TROUBLESHOOTING**

| SYMPTOM | POSSIBLE CAUSE | CORRECTION PROCEDURE |
|---|---|---|
| 1) – Slow starting | Starting vacuum pressure too high. | Reduce pressure to $10^{-5}$ Torr recommended $10^{-4}$ Torr minimum. |
| 2) – Slow starting (more than 30 minutes). | *Air leaks* which limit pressure to above $10^{-6}$ Torr (mbar) and cause longer starting time. | Leak check the vacuum system with a helium leak detector. |
| 3) – Slow pump-down due to long exposure of viton parts to air. | *Viton releases considerable gas* after long exposure to air. (A bell-jar system which reached $1.5 \times 10^{-8}$ Torr ($2 \times 10^{-8}$ mbar) in 24 hours after 30 minutes air exposure, will only reach $7.5 \times 10^{-8}$ Torr ($1 \times 10^{-7}$ mbar) in 24 hours after 20 hours air exposure). | With the system under vacuum, pump for several days, or heat to 100-150°C for up to 15 hours. |
| 4) – Slow pump-down due to absorption of vapours on pump and system walls. | *Vapours and gases admitted to a system are absorbed* on the walls of the system and pump. Subsequent reduction in pressure depends on the rate of depletion of this vapour. Heavy hydrocarbons are most troublesome because of their relative low vapour pressure and they are very difficult to remove, even by baking. | Bake the system walls, thereby accelerating the desorption process. Baking mobilizes the vapours so they can be cracked and pumped by discharge (see para. “BAKEOUT OPERATION”). |
| 5) – Slow starting or slow pump-down. | High voltage feedthrough is leaking. | Replace the feedthrough. |
| 6) – Current higher than expected at any given pressure. | Ion pump leakage current causing higher pressure reading. | Highpot the pump. |
| 7) – System fails to achieve desired UHV vacuum pressure. | System not fully baked. Water vapour limits base pressure. | Bake the system walls, thereby accelerating the desorption process. Baking mobilizes the vapours so they can be cracked and pumped by discharge (see para. “BAKEOUT OPERATION”). |
| 8) – System fails to achieve desired UHV vacuum pressure. | System not appropriately cleaned for UHV. Excessive outgassing from walls limits base pressure. | Clean all components for UHV and bake the system again. |

**VACION *PLUS* PUMP REPLACEMENT PARTS AND ACCESSORIES**

| | PART NUMBER | | | |
|---|---|---|---|---|
| | **DIODE** | **NOBLE DIODE** | **TRIODE** | **STARCELL** |
| Basic pump | 919-1710 | 919-1720 | 919-1730 | 919-1740 |
| **Pump with options** | | | | |
| With heaters installed (120 V)<br>(220 V) | 919-1711<br>919-1712 | 919-1721<br>919-1722 | 919-1731<br>919-1732 | 919-1741<br>919-1742 |
| Double-ended | 919-1750 | 919-1760 | 919-1770 | 919-1780 |
| Double-ended with heaters installed (120 V)<br>(220 V) | 919-1751<br>919-1752 | 919-1761<br>919-1762 | 919-1771<br>919-1772 | 919-1781<br>919-1782 |
| **Cables and accessories** | | | | |
| HV rad. Resist. cable, with interlock | 929-0705 | | | |
| **Replacement parts** | | | | |
| HV Feedthrough | 959-5125 | | | |
| Pumping elements (q.ty 8 needed) | 919-9040 | 919-9045 | 919-9035 | 919-9030 |
| Heaters (power: 780 W) (120V)<br>(220V) | 919-0077<br>919-0076 | | | |
| Copper gasket for 8” inlet flange (10-pack, individually sealed) | FG-0800-CI | | | |
| Nut and bolt set for 8” inlet flange | FB-0600-C12 | | | |
| Copper gasket for 1 1/3" CF feedthrough flange (10-pack, individually sealed) | FG-0133-CI | | | |
| Nut and bolt set for 1 1/3" CF feedthrough flange, 8-32x3/4 (25-pack) | FB-0133-C | | | |

For a complete overview of Varian's extensive vacuum product line, please refer to the Varian Vacuum Catalogue.

**VACION *PLUS* PUMP CONTROLLERS**

The following controller series are available to supply the VacIon Plus pumps:

- MiniVac
- MidiVac
- Dual

Please refer to the Varian Vacuum Catalogue to choose the correct controller for each pump.

VARIAN

# *Request for Return*

ISO 9001 REGISTERED

1. A Return Authorization Number (RA#) **WILL NOT** be issued until this Request for Return is completely filled out, signed and returned to Varian Customer Service.
2. Return shipments shall be made in compliance with local and international **Shipping Regulations** (IATA, DOT, UN).
3. The customer is expected to take the following actions to ensure the **Safety** of workers at Varian: (a) Drain any oils or other liquids, (b) Purge or flush all gasses, (c) Wipe off any excess residues in or on the equipment, (d) Package the equipment to prevent shipping damage, (for Advance Exchanges please use packing material from replacement unit).
4. Make sure the shipping documents clearly show the RA# and then return the package to the Varian location nearest you.

**North and South America**
Varian Vacuum Technologies
121 Hartwell Ave
Lexington, MA 02421
Phone : +1 781 8617200
Fax: +1 781 8609252

**Europe and Middle East**
Varian SpA
Via Flli Varian 54
10040 Leini (TO) – ITALY
Phone: +39 011 9979111
Fax: +39 011 9979330

**Asia and ROW**
Varian Vacuum Technologies
Local Office

***CUSTOMER INFORMATION***

Company name: ……

Contact person: Name: …… Tel: ……

Fax: …… E-Mail: ……

Ship Method: …… Shipping Collect #: …… P.O.#: ……

*Europe only*: VAT reg. Number: …… *USA only*: ☐ Taxable ☐ Non-taxable

Customer Ship To: …… Customer Bill To: ……

……

……

……

……

***PRODUCT IDENTIFICATION***

| Product Description | Varian P/N | Varian S/N | Purchase Reference |
|---|---|---|---|
| | | | |
| | | | |
| | | | |

***TYPE OF RETURN*** *(check appropriate box)*

☐ Paid Exchange ☐ Paid Repair ☐ Warranty Exchange ☐ Warranty Repair ☐ Loaner Return
☐ Credit ☐ Shipping Error ☐ Evaluation Return ☐ Calibration ☐ Other ……

***HEALTH and SAFETY CERTIFICATION***

Varian Vacuum Technologies **CAN NOT ACCEPT** any equipment which contains **BIOLOGICAL HAZARDS** or **RADIOACTIVITY**. Call Varian Customer Service to discuss alternatives if this requirement presents a problem.

The equipment listed above (check one):

☐ **HAS NOT** been exposed to any toxic or hazardous materials

OR

☐ **HAS** been exposed to any toxic or hazardous materials. In case of this selection, check boxes for any materials that equipment was exposed to, check all categories that apply:

☐ Toxic ☐ Corrosive ☐ Reactive ☐ Flammable ☐ Explosive ☐ Biological ☐ Radioactive

List all toxic or hazardous materials. Include product name, chemical name and chemical symbol or formula.

……

Print Name: …… Customer Authorized Signature: ……

Print Title: …… Date: ……/……/……

**NOTE:** If a product is received at Varian which is contaminated with a toxic or hazardous material that was not disclosed, **the customer will be held responsible** for all costs incurred to ensure the safe handling of the product, and **is liable** for any harm or injury to Varian employees as well as to any third party occurring as a result of exposure to toxic or hazardous materials present in the product.

Do not write below this line

Notification (RA)#: …… Customer ID#: …… Equipment #: ……

VARIAN

*Request for Return*

ISO 9001 REGISTERED

# *FAILURE REPORT*

**TURBO PUMPS and TURBOCONTROLLERS**

| | | POSITION | PARAMETERS | |
|---|---|---|---|---|
| ☐ Does not start | ☐ Noise | ☐ Vertical | Power: | Rotational Speed: |
| ☐ Does not spin freely | ☐ Vibrations | ☐ Horizontal | Current: | Inlet Pressure: |
| ☐ Does not reach full speed | ☐ Leak | ☐ Upside-down | Temp 1: | Foreline Pressure: |
| ☐ Mechanical Contact | ☐ Overtemperature | ☐ Other: | Temp 2: | Purge flow: |
| ☐ Cooling defective | | …… | OPERATION TIME: | |

**TURBOCONTROLLER ERROR MESSAGE:**

**ION PUMPS/CONTROLLERS**

| | |
|---|---|
| ☐ Bad feedthrough | ☐ Poor vacuum |
| ☐ Vacuum leak | ☐ High voltage problem |
| ☐ Error code on display | ☐ Other |

Customer application:

**VALVES/COMPONENTS**

| | |
|---|---|
| ☐ Main seal leak | ☐ Bellows leak |
| ☐ Solenoid failure | ☐ Damaged flange |
| ☐ Damaged sealing area | ☐ Other |

Customer application:

**LEAK DETECTORS**

| | |
|---|---|
| ☐ Cannot calibrate | ☐ No zero/high backround |
| ☐ Vacuum system unstable | ☐ Cannot reach test mode |
| ☐ Failed to start | ☐ Other |

Customer application:

**INSTRUMENTS**

| | |
|---|---|
| ☐ Gauge tube not working | ☐ Display problem |
| ☐ Communication failure | ☐ Degas not working |
| ☐ Error code on display | ☐ Other |

Customer application:

**PRIMARY PUMPS**

| | |
|---|---|
| ☐ Pump doesn't start | ☐ Noisy pump (describe) |
| ☐ Doesn't reach vacuum | ☐ Over temperature |
| ☐ Pump seized | ☐ Other |

Customer application:

**DIFFUSION PUMPS**

| | |
|---|---|
| ☐ Heater failure | ☐ Electrical problem |
| ☐ Doesn't reach vacuum | ☐ Cooling coil damage |
| ☐ Vacuum leak | ☐ Other |

Customer application:

## FAILURE DESCRIPTION

(Please describe in detail the nature of the malfunction to assist us in performing failure analysis):

***NOTA: Su richiesta questo documento è disponibile anche in Tedesco, Italiano e Francese.***
***REMARQUE : Sur demande ce document est également disponible en allemand, italien et français.***
***HINWEIS: Auf Aufrage ist diese Unterlage auch auf Deutsch, Italienisch und Französisch erhältlich.***

# Sales and Service Offices

**France and Benelux**
**Varian s.a.**
7 Avenue des Tropiques
Z.A. de Courtaboeuf - B.P. 12
Les Ulis cedex (Orsay) 91941
France
Tel: (33) 1 69 86 38 84
Fax: (33) 1 69 86 29 88
From Benelux Tel: (31) 118 67 15 70
From Benelux Fax: (31) 118 67 15 69

**Canada**
**Central coordination through:**
**Varian Vacuum Technologies**
121 Hartwell Avenue
Lexington, MA 02421
USA
Tel: (781) 861 7200
Fax: (781) 860 5437
Toll Free # 1 (800) 882 7426

**China**
**Varian Technologies - Beijing**
Rm 1648 Central Tower South Wing
Beijing Junefield Plaza
No. 10 XuanWuMenWai Street
Beijing 100052
P.R. China
Tel: (86) 10 63108550
Fax: (86) 10 63100141
Toll Free: 800 820 6556

**Germany and Austria**
**Varian Deutschland GmbH**
Alsfelder Strasse 6
Postfach 11 14 35
64289 Darmstadt
Germany
Tel: (49) 6151 703 353
Fax: (49) 6151 703 302

**India**
**Varian India PVT LTD**
101-108, 1st Floor
1010 Competent House
7, Nangal Raya Business Centre
New Delhi 110 046
India
Tel: (91) 11 28521171
Fax: (91) 11 28521173

**Italy**
**Varian Inc.**
**Vacuum Technologies**
Via F.lli Varian 54
10040 Leini, (Torino)
Italy
Tel: (39) 011 997 9 111
Fax: (39) 011 997 9 350

**Japan**
**Varian Vacuum Technologies**
Sumitomo Shibaura Building, 8th Floor
4-16-36 Shibaura
Minato-ku, Tokyo 108
Japan
Tel: (81) 3 5232 1253
Fax: (81) 3 5232 1263
Toll Free: 0120 655 040

**Korea**
**Varian Technologies Korea, Ltd**
Shinsa 2nd Bldg. 2F
966-5 Daechi-dong
Kangnam-gu, Seoul
Korea 135-280
Tel: (82) 2 3452 2452
Fax: (82) 2 3452 2451
Toll Free: 080 222 2452

**Mexico**
**Varian, S. de R.L. de C.V.**
Concepcion Beistegui No 109
Col Del Valle
C.P. 03100
Mexico, D.F.
Tel: (52) 5 523 9465
Fax: (52) 5 523 9472

**Taiwan**
**Varian Technologies Asia Ltd.**
14F-6, No.77, Hsin Tai Wu Rd., Sec. 1
Hsi chih, Taipei Hsien
Taiwan, R.O.C.
Tel: (886) 2 2698 9555
Fax: (886) 2 2698 9678
Toll Free: 0800 051342

**UK and Ireland**
**Varian Ltd.**
6 Mead Road
Oxford Industrial Park - Yarnton
Oxford OX5 1QU - England
Tel: (44) 1865 291570
Fax: (44) 1865 291571

**United States**
**Varian Vacuum Technologies**
121 Hartwell Avenue
Lexington, MA 02421
USA
Tel: (781) 861 7200
Fax: (781) 860 5437

**Other Countries**
**Varian Inc.**
**Vacuum Technologies**
Via F.lli Varian 54
10040 Leini, (Torino)
Italy
Tel: (39) 011 997 9 111
Fax: (39) 011 997 9 350

**Customer Support & Service:**

**North America**
Toll-Free: 1 800 882 7426
vtl.technical.support@varianinc.com

**Europe**
Tel: 00 800 234 234 00
vtt.technical.support@varianinc.com

**China**
Toll-Free: 800 820 8266
vtc.technical.support@varianinc.com

**Japan**
Toll-Free: 0120 655 040
vtj.technical.support@varianinc.com

**Korea**
Toll-Free: 080 222 2452
vtk.technical.support@varianinc.com

**Taiwan**
Toll-Free: 0 800 051 342
vtw.technical.support@varianinc.com

**Worldwide Web Site, Catalog and Order On-line:**
www.varianinc.com

Representative in most countries

VARIAN

03/06