VARIAN

vacuum technologies

Turbo-V Vent Device

Model 969-9831

(GB) INSTRUCTION MANUAL

87-900-806-01 (G)
JULY 2006

Turbo-V Vent Device

VARIAN

vacuum technologies

Dear Customer,

Thank you for purchasing a VARIAN vacuum product. At VARIAN Vacuum Technologies we make every effort to ensure that you will be satisfied with the product and/or service you have purchased.

As part of our Continuous Improvement effort, we ask that you report to us any problem you may have had with the purchase or operation of our product. On the back side you find a Corrective Action Request form that you may fill out in the first part and return to us.

This form is intended to supplement normal lines of communications and to resolve problems that existing systems are not addressing in an adequate or timely manner.

Upon receipt of your Corrective Action Request we will determine the Root Cause of the problem and take the necessary actions to eliminate it. You will be contacted by one of our employees who will review the problem with you and update you, with the second part of the same form, on our actions.

Your business is very important to us. Please, take the time and let us know how we can improve.

Sincerely,

Sergio PIRAS

Vice President and General Manager
VARIAN Vacuum Technologies

Note: Fax or mail the Customer Request for Action (see backside page) to VARIAN Vacuum Technologies (Torino) - Quality Assurance or to your nearest VARIAN representative for onward transmission to the same address.

CUSTOMER REQUEST FOR CORRECTIVE / PREVENTIVE / IMPROVEMENT ACTION

TO : VARIAN VACUUM TECHNOLOGIES TORINO - QUALITY ASSURANCE

FAX N° : XXXX - 011 - 9979350

ADDRESS: VARIAN S.p.A. - Via F.lli Varian, 54 - 10040 Leinì (Torino) - Italy

E-MAIL : marco.marzio@varianinc.com

NAME	COMPANY	FUNCTION
_____	_____	_____

ADDRESS : _____

TEL. N° : _____ FAX N° : _____

E-MAIL : _____

PROBLEM / SUGGESTION :

_____

REFERENCE INFORMATION (model n°, serial n°, ordering information, time to failure after installation, etc.) :

_____

DATE _____

CORRECTIVE ACTION PLAN / ACTUATION LOG N° _____
(by VARIAN VTT)

_____

XXXX = Code for dialing Italy from your country (es. 01139 from USA; 00139 from Japan, etc.)

VARIAN

INSTRUCTION FOR USE 1

TECHNICAL INFORMATION 2

GENERAL 2
Vent Control Unit 2
Vent Valve 2

VENT DEVICE SPECIFICATIONS 3
Control Unit 3
Vent Valve 3

TURBO-V VENT DEVICE OUTLINE 3

CONTROL UNIT INSTALLATION 4

VENT VALVE INSTALLATION 4

OPERATION 4

TIME SETTING 5

VENT CONTROL UNIT DESCRIPTION 6
Power Circuit 6
Protection Circuit 6
Timer Circuit 6

TURBO-V VENT DEVICE REPLACEMENT PARTS 7

GENERAL INFORMATION

Operators and service personnel must be aware of all hazards associated with this equipment. They must know how to recognize hazardous and potentially hazardous conditions, and know how to avoid them. The consequences of unskilled, improper, or careless operation of the equipment can be serious.

This product must only be operated and maintained by trained personnel. Every operator or service person must read and thoroughly understand operation/ maintenance manuals and any additional information provided by Varian.

All warnings and cautions should be read carefully and strictly observed. Address any safety, operation, and/or maintenance questions to your nearest Varian office.

The following format is used in this manual to call attention to hazards:

WARNING!

Warning are used when failure to observe instructions or precautions could result in injury or death.

CAUTION

Warning Cautions are used when failure to observe instructions could result in damage to equipment, whether Varian supplied or other associated equipment.

NOTE

Information to aid the operator in obtaining the best performance from the equipment.

TURBO-V VENT DEVICE DESCRIPTION

The 969-9831 Turbo-V vent device, consisting of a vent control unit and a vent valve, is a complete unit suitable for automatic venting of the Turbo-V pump when it is switched off or during a power failure switch (refer to the following figure).

The Vent device is powered by the Turbo-V controller and a battery back-up capability is built in.

The vent control unit is provided with a delay time to avoid undesired venting during a temporary power failure and to allow closure of the system valves before venting. A second setting is also provided to control the venting time to atmosphere.

The Turbo-V pump must be vented when it is shut down to prevent the forepump oil from contaminating the Turbo-V and the connected chamber.

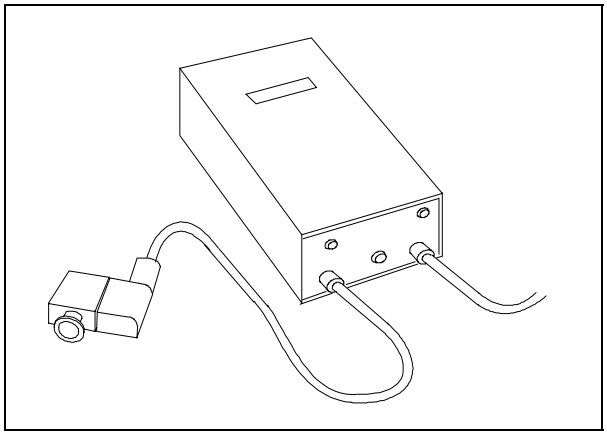

Vent Valve and Control Unit

The 969-9831 Turbo-V vent device consists of:

- 03-660270 vent control unit
- 03-661835-02 vent valve

DISPOSAL

Meaning of the "WEEE" logo found in labels
The following symbol is applied in accordance with the EC WEEE (Waste Electrical and Electronic Equipment) Directive.
This symbol (**valid only in countries of the European Community**) indicates that the product it applies to must NOT be disposed of together with ordinary domestic or industrial waste but must be sent to a differentiated waste collection system.
The end user is therefore invited to contact the supplier of the device, whether the Parent Company or a retailer, to initiate the collection and disposal process after checking the contractual terms and conditions of sale.

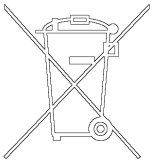

GENERAL

The 969-9831 Turbo-V vent device, consisting of a vent control unit and a vent valve, is a complete unit suitable for automatic venting of the Turbo-V pump when it is switched off or during a power failure switch (refer to the following figure).

The Vent device is powered by the Turbo-V controller and a battery back-up capability is built in.

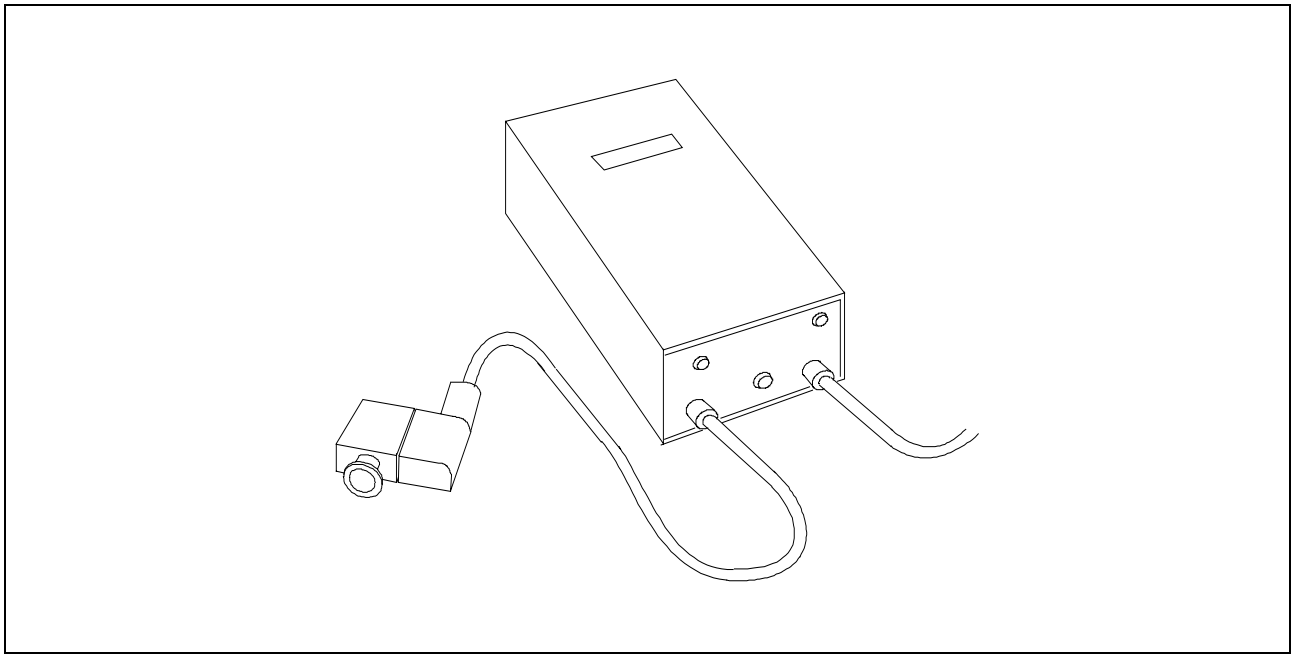

Vent Valve and Control Unit

The 969-9831 Turbo-V vent device consists of:

- 03-660270 vent control unit
- 03-661835-02 vent valve

Vent Control Unit

The vent control unit is powered by the Turbo-V controller (120 Vac, 50/60 Hz) via the power interconnecting connector. The vent control unit is provided with 4 rubber feet at the bottom and it is not suitable for rack mounting. Two LEDs indicate when the mains is supplied (yellow LED) and when the valve is open (red LED).

When the supply voltage is present (Turbo-V pump ON), relay RL1 allows the integral battery to be recharged, then the timer circuits are inhibited and reset. When the Turbo-V is shut off, RL1 still remains energized and the delay timer counter starts.

After the pre-set delay time, the valve opens and the venting time count starts. At the end of the venting time, relay RL1 de-energizes and the battery is disconnected. The battery is protected against short circuits.

Depth of discharge and the charging cycle are a function ambient temperature. At high temperatures the battery capacity increases while it decreases at low temperatures.

Vent Valve

The vent valve consists of a small normally-closed straight through, electromagnetically-actuated and viton-sealed valve with an NW 10 KF flange on the high vacuum port and a filter or adapter tube 1/4” on the air entrance port. The valve closes under control of a metallic spring and opens when power is supplied to the valve electromagnet.

NOTE

A riffled nozzle is provided for use in lieu of the sintered filter when the Turbo-V pump is vented by the dry gas bottle (line).

VENT DEVICE SPECIFICATIONS

Control Unit

Input: voltage frequency power fuse	120 V ±10% 50 to 60 Hz 8 VA T315 (mA)
Output: voltage power (max)	22.5 Vdc ±3% 1.2 W
Delay time	Factory set to 15 seconds (adjustable up to 36 minutes)
Venting time	Factory set to 3 minutes (adjustable up to 36 minutes)
Operating temperature	0 to 40 °C (32 °F to 104 °F)
Storage temperature	-20 °C to + 50 °C (-4 °F to +122 °F)
Connecting cables Input line Output to valve	 1.5 metres long, two-conductor wire 5 metres long, two conductor wire
Weight	1.3 Kg (2.9 lbs)

Vent Valve

High vacuum flange	NW 10 KF
Gas entrance	Riffled nozzle 4.8 mm (0,19") O.D./Tube 1/4”
Orifice size	1.2 mm (0.05")
Pressure range	10^{-6} mbar to 1bar (10^{-7} Torr to atm)
Leak rate	$1x10^{-7}$ mbar l/s
Life cycle	One million cycles
Input: voltage power	24 Vdc +10% -5% 1 W
Bakeout temperature	60 °C (140 °F)
Mounting position	Any
Weight	120 gr (0.27 lbs)

TURBO-V VENT DEVICE OUTLINE

The outline dimensions for the Turbo-V Vent Device are shown in the following figure.

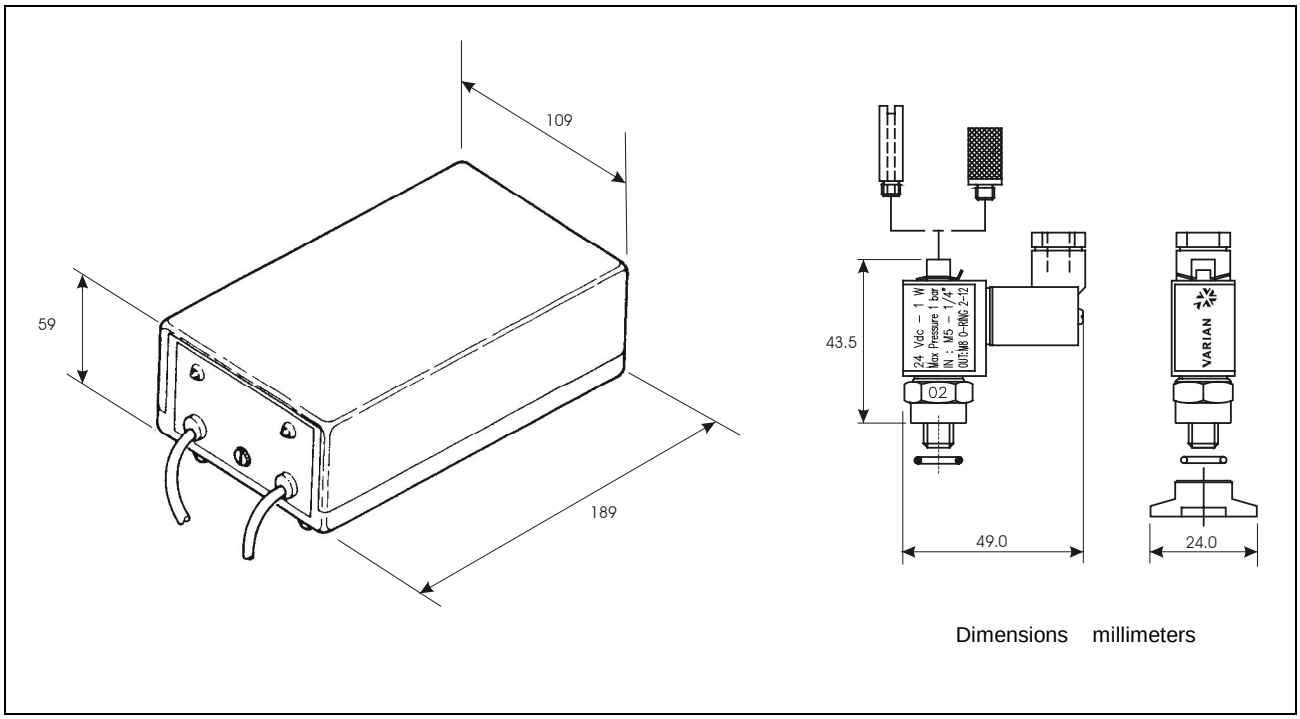

Turbo-V Vent Device Outline

CONTROL UNIT INSTALLATION

Place the control unit free standing near the Turbo-V controller and connect the 1.5 metres long supply cable to the power interconnecting connector (120 Vac vent valve out, see the relevant Turbo-V controller instruction manual). Connect the 5 metres long valve cable to the valve connector ensuring that the positive lead (brown) is connected to pin 2 and the negative lead (blue) to pin 1.

NOTE

When first installed or after 6 months of non-use, leave the control unit under voltage for at least 3 hours in order to fully recharge the battery before use.

VENT VALVE INSTALLATION

Connect the NW 10 KF port to the chamber or pump vent port. This port is compatible with an NW 16 KF flange having an adaptive centering ring.

NOTE

Use the provided filter to prevent the ingress of dust, dirt or contaminants, when the pump is vented to atmosphere.

CAUTION

When a dry gas bottle (line) is used, never exceed 1 bar (15 psig) to the riffled nozzle connection, otherwise a leak in the Turbo-V pump may occur.

CAUTION

When a dry gas bottle line is used, check the correct venting time to prevent overpressuring the Turbo-V pump.

CAUTION

It is strongly recommended to power the vent unit using the 120 Vac terminal available on the Turbo-V controller rear panel. This will ensure that it is correctly sequenced.

NOTE

The Turbo-V vent device has been designed to vent the Turbo-V pump only. To vent the chamber, it is advisable to install a suitable vent valve.

OPERATION

When the Turbo-V pump starts, the yellow LED lights, indicating that the battery is being charged and the set timers are reset. If the pump is switched off or a power failure occurs, the yellows LED goes off and the delay time starts. At the end of delay, the valve (red) LED lights and the valve opens for the set time. At the end of the venting time the valve closes, the valve (red) LED goes off, and the battery is switched off. If during the delay or venting time the Turbo-V pump is switched on (even if only for a few seconds) both delay and venting time are reset.

NOTE

A charged battery is able to supply a minimum of 3 complete venting cycles with the maximum delay and venting time.

CAUTION

The life of the battery is affected by ambient temperature. Never exceed the specified operating temperature and replace the battery every 30 months.

TIME SETTING

WARNING!

High voltage present in the control unit can cause severe injury or death. Service must be carried out only by qualified and authorized personnel.

Disconnect the vent controller from the power interconnecting connector on the Turbo-V controller and remove the top cover of the vent control unit by undoing the four bottom screws.

Choose the appropriate times, make the appropriate jumper setting and position the rotary switch (refer to the following figure). Place only one jumper for each time and then turn the rotary switch multiplier for the desired value.

E.g: to set a delay time of 30 seconds and a venting time of 4 minutes proceed as follows:

- Adjust the delay time rotary switch to 8 and place the jumper across 1/16 minute.
- Adjust the venting time rotary switch to 8 and place the jumper across 1/2 minute.

CAUTION

Use the appropriate tool to adjust the time settings to avoid damages to the rotary switches.

The minimum venting times for each Turbo-V pump series with the high vacuum flange blanked off and leak tight, are listed below.

- Turbo-V 60/80 2/16 minute
- Turbo-V 200/250 3/6 minute
- Turbo-V 300 4/16 minute
- Turbo-V 450 7/16 minute
- Turbo-V 1000 0.5 minute
- Turbo-V 1800 1 minute
- Turbo-V 3500 1.5 minutes
- Turbo-V 6000 4 minutes

The minimum venting time is the time needed to reach a pressure of about 500 mbar (375 Torr) inside the pump in order to avoid mechanical pump oil backstreaming and contamination of the Turbo-V pump.

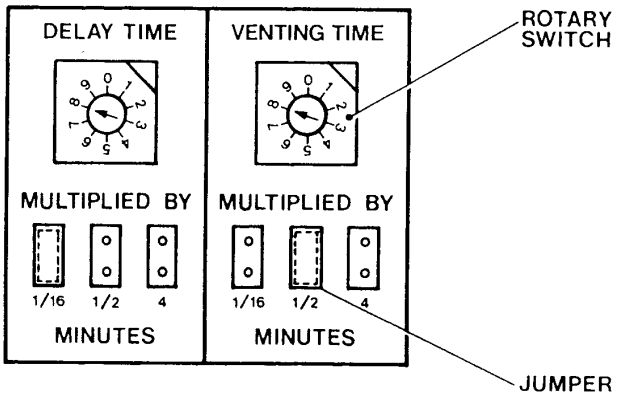

Times Selector

VENT CONTROL UNIT DESCRIPTION

The control unit has three main sections: power circuit, protection circuit, and time circuit (refer to following figure).

Power Circuit

The mains voltage is stepped down to 12 Vac, which is rectified by the full wave bridge rectifier smoothed by capacitor C1 and regulated by U8.
The output voltage of U8 is adjusted by P3 to 6.9 V and feeds the battery timer circuit, and U7 which steps up the voltage at 23 V. The output of U7 adjusted by P2 drives the vent valve.

Protection Circuit

If the leads are shorted together or the vent valve coil is shorted, transistor Q2 detects the condition and drives Q1 to deenergize relay RL1 and consequently the battery is disconnected.

To avoid complete discharge of the battery, a sensor circuit is provided. When the battery voltage reaches 4.5 V, transistor Q4 is cut off.

Subsequently, relay RL1 deenergizes and the battery is disconnected.

Even though the battery is designed to accept overcharging, to avoid thermal runaway problems caused by overcharging, diodes D7 and D9 are provided. This circuit allows an automatic adjustment of the charging voltage in relation to the environment temperature.

Timer Circuit

Two similar timer circuits are provided, where U5, U4 are the clocks and U3, U2 are the step-down counters presettable by jumpers and rotary switches.

When the mains voltage is supplied, the step-down counter U3 is inhibited by a high preset enable signal at pin 1 and U5 is reset by a positive pulse at pin 6 (master reset).

When mains is switched off, U3 starts to count down and at the end of delay removes the enable signal from pin 1 of U2 that starts the venting time and allows the vent valve to open.

TURBO-V VENT DEVICE REPLACEMENT PARTS

DESCRIPTION	PART NUMBER
Vent valve (complete)	03-661718-02
Gas filter	28-900008-01
Battery 6 V 1Ah	74-103100-01
Relay 6V	72-114110-01
Transformer T1 (120/12V, 8VA)	03-660295
L.E.D. (yellow) LT4223	67-560005
L.E.D. (red) LT4253	67-560004

For a complete overview of Varian's extensive vacuum product line, please refer to the Varian Vacuum Catalogue.

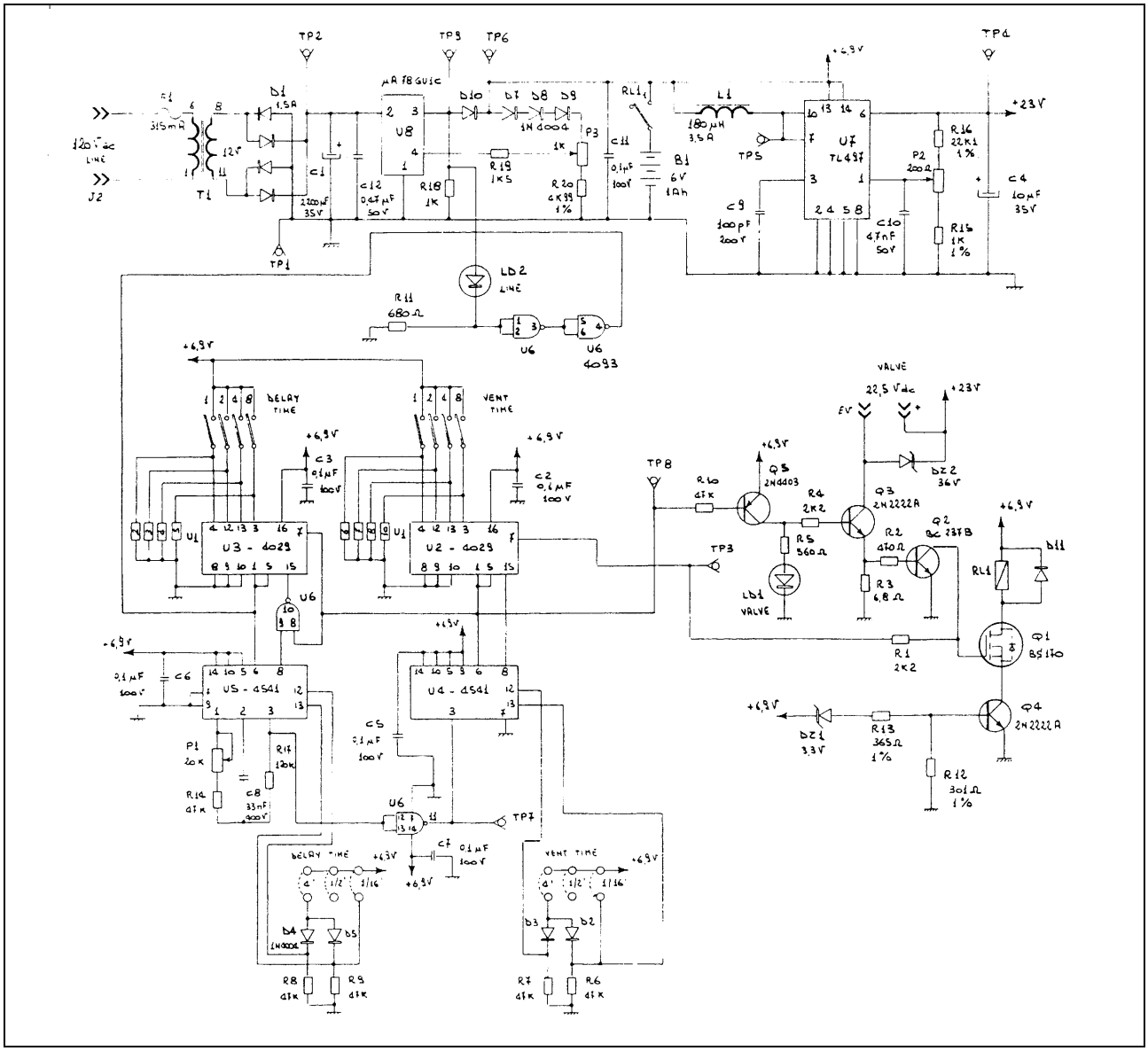

Turbo-V Vent Control Unit Schematic Diagram

VARIAN

Request for Return

ISO 9001 REGISTERED

1. A Return Authorization Number (RA#) **WILL NOT** be issued until this Request for Return is completely filled out, signed and returned to Varian Customer Service.
2. Return shipments shall be made in compliance with local and international **Shipping Regulations** (IATA, DOT, UN).
3. The customer is expected to take the following actions to ensure the **Safety** of workers at Varian: (a) Drain any oils or other liquids, (b) Purge or flush all gasses, (c) Wipe off any excess residues in or on the equipment, (d) Package the equipment to prevent shipping damage, (for Advance Exchanges please use packing material from replacement unit).
4. Make sure the shipping documents clearly show the RA# and then return the package to the Varian location nearest you.

North and South America
Varian Vacuum Technologies
121 Hartwell Ave
Lexington, MA 02421
Phone : +1 781 8617200
Fax: +1 781 8609252

Europe and Middle East
Varian SpA
Via Flli Varian 54
10040 Leini (TO) – ITALY
Phone: +39 011 9979111
Fax: +39 011 9979330

Asia and ROW
Varian Vacuum Technologies
Local Office

CUSTOMER INFORMATION

Company name: ……

Contact person: Name: …… Tel: ……

Fax: …… E-Mail: ……

Ship Method: …… Shipping Collect #: …… P.O.#: ……

Europe only: VAT reg. Number: …… *USA only*: ☐ Taxable ☐ Non-taxable

Customer Ship To: …… Customer Bill To: ……

……

……

……

……

PRODUCT IDENTIFICATION

Product Description	Varian P/N	Varian S/N	Purchase Reference

TYPE OF RETURN *(check appropriate box)*

☐ Paid Exchange ☐ Paid Repair ☐ Warranty Exchange ☐ Warranty Repair ☐ Loaner Return
☐ Credit ☐ Shipping Error ☐ Evaluation Return ☐ Calibration ☐ Other ……

HEALTH and SAFETY CERTIFICATION

Varian Vacuum Technologies **CAN NOT ACCEPT** any equipment which contains **BIOLOGICAL HAZARDS** or **RADIOACTIVITY**. Call Varian Customer Service to discuss alternatives if this requirement presents a problem.

The equipment listed above (check one):

☐ **HAS NOT** been exposed to any toxic or hazardous materials

OR

☐ **HAS** been exposed to any toxic or hazardous materials. In case of this selection, check boxes for any materials that equipment was exposed to, check all categories that apply:

☐ Toxic ☐ Corrosive ☐ Reactive ☐ Flammable ☐ Explosive ☐ Biological ☐ Radioactive

List all toxic or hazardous materials. Include product name, chemical name and chemical symbol or formula.

……

Print Name: …… Customer Authorized Signature: ……

Print Title: …… Date: ……/……/……

NOTE: If a product is received at Varian which is contaminated with a toxic or hazardous material that was not disclosed, **the customer will be held responsible** for all costs incurred to ensure the safe handling of the product, and **is liable** for any harm or injury to Varian employees as well as to any third party occurring as a result of exposure to toxic or hazardous materials present in the product.

Do not write below this line

Notification (RA)#: …… Customer ID#: …… Equipment #: ……

VARIAN

Request for Return

ISO 9001 REGISTERED

FAILURE REPORT

TURBO PUMPS and TURBOCONTROLLERS

		POSITION	PARAMETERS	
☐ Does not start	☐ Noise	☐ Vertical	Power:	Rotational Speed:
☐ Does not spin freely	☐ Vibrations	☐ Horizontal	Current:	Inlet Pressure:
☐ Does not reach full speed	☐ Leak	☐ Upside-down	Temp 1:	Foreline Pressure:
☐ Mechanical Contact	☐ Overtemperature	☐ Other:	Temp 2:	Purge flow:
☐ Cooling defective		……	OPERATION TIME:	

TURBOCONTROLLER ERROR MESSAGE:

ION PUMPS/CONTROLLERS

☐ Bad feedthrough	☐ Poor vacuum
☐ Vacuum leak	☐ High voltage problem
☐ Error code on display	☐ Other

Customer application:

VALVES/COMPONENTS

☐ Main seal leak	☐ Bellows leak
☐ Solenoid failure	☐ Damaged flange
☐ Damaged sealing area	☐ Other

Customer application:

LEAK DETECTORS

☐ Cannot calibrate	☐ No zero/high backround
☐ Vacuum system unstable	☐ Cannot reach test mode
☐ Failed to start	☐ Other

Customer application:

INSTRUMENTS

☐ Gauge tube not working	☐ Display problem
☐ Communication failure	☐ Degas not working
☐ Error code on display	☐ Other

Customer application:

PRIMARY PUMPS

☐ Pump doesn't start	☐ Noisy pump (describe)
☐ Doesn't reach vacuum	☐ Over temperature
☐ Pump seized	☐ Other

Customer application:

DIFFUSION PUMPS

☐ Heater failure	☐ Electrical problem
☐ Doesn't reach vacuum	☐ Cooling coil damage
☐ Vacuum leak	☐ Other

Customer application:

FAILURE DESCRIPTION

(Please describe in detail the nature of the malfunction to assist us in performing failure analysis):

NOTA: Su richiesta questo documento è disponibile anche in Tedesco, Italiano e Francese.
REMARQUE : Sur demande ce document est également disponible en allemand, italien et français.
HINWEIS: Auf Aufrage ist diese Unterlage auch auf Deutsch, Italienisch und Französisch erhältlich.

Sales and Service Offices

France and Benelux
Varian s.a.
7 Avenue des Tropiques
Z.A. de Courtaboeuf - B.P. 12
Les Ulis cedex (Orsay) 91941
France
Tel: (33) 1 69 86 38 84
Fax: (33) 1 69 86 29 88
From Benelux Tel: (31) 118 67 15 70
From Benelux Fax: (31) 118 67 15 69

Canada
Central coordination through:
Varian Vacuum Technologies
121 Hartwell Avenue
Lexington, MA 02421
USA
Tel: (781) 861 7200
Fax: (781) 860 5437
Toll Free # 1 (800) 882 7426

China
Varian Technologies - Beijing
Rm 1648 Central Tower South Wing
Beijing Junefield Plaza
No. 10 XuanWuMenWai Street
Beijing 100052
P.R. China
Tel: (86) 10 63108550
Fax: (86) 10 63100141
Toll Free: 800 820 6556

Germany and Austria
Varian Deutschland GmbH
Alsfelder Strasse 6
Postfach 11 14 35
64289 Darmstadt
Germany
Tel: (49) 6151 703 353
Fax: (49) 6151 703 302

India
Varian India PVT LTD
101-108, 1st Floor
1010 Competent House
7, Nangal Raya Business Centre
New Delhi 110 046
India
Tel: (91) 11 28521171
Fax: (91) 11 28521173

Italy
Varian Inc.
Vacuum Technologies
Via F.lli Varian 54
10040 Leini, (Torino)
Italy
Tel: (39) 011 997 9 111
Fax: (39) 011 997 9 350

Japan
Varian Vacuum Technologies
Sumitomo Shibaura Building, 8th Floor
4-16-36 Shibaura
Minato-ku, Tokyo 108
Japan
Tel: (81) 3 5232 1253
Fax: (81) 3 5232 1263
Toll Free: 0120 655 040

Korea
Varian Technologies Korea, Ltd
Shinsa 2nd Bldg. 2F
966-5 Daechi-dong
Kangnam-gu, Seoul
Korea 135-280
Tel: (82) 2 3452 2452
Fax: (82) 2 3452 2451
Toll Free: 080 222 2452

Mexico
Varian, S. de R.L. de C.V.
Concepcion Beistegui No 109
Col Del Valle
C.P. 03100
Mexico, D.F.
Tel: (52) 5 523 9465
Fax: (52) 5 523 9472

Taiwan
Varian Technologies Asia Ltd.
14F-6, No.77, Hsin Tai Wu Rd., Sec. 1
Hsi chih, Taipei Hsien
Taiwan, R.O.C.
Tel: (886) 2 2698 9555
Fax: (886) 2 2698 9678
Toll Free: 0800 051342

UK and Ireland
Varian Ltd.
6 Mead Road
Oxford Industrial Park - Yarnton
Oxford OX5 1QU - England
Tel: (44) 1865 291570
Fax: (44) 1865 291571

United States
Varian Vacuum Technologies
121 Hartwell Avenue
Lexington, MA 02421
USA
Tel: (781) 861 7200
Fax: (781) 860 5437

Other Countries
Varian Inc.
Vacuum Technologies
Via F.lli Varian 54
10040 Leini, (Torino)
Italy
Tel: (39) 011 997 9 111
Fax: (39) 011 997 9 350

Customer Support & Service:

North America
Toll-Free: 1 800 882 7426
vtl.technical.support@varianinc.com

Europe
Tel: 00 800 234 234 00
vtt.technical.support@varianinc.com

China
Toll-Free: 800 820 8266
vtc.technical.support@varianinc.com

Japan
Toll-Free: 0120 655 040
vtj.technical.support@varianinc.com

Korea
Toll-Free: 080 222 2452
vtk.technical.support@varianinc.com

Taiwan
Toll-Free: 0 800 051 342
vtw.technical.support@varianinc.com

Worldwide Web Site, Catalog and Order On-line:
www.varianinc.com

Representative in most countries

VARIAN

03/06