VARIAN

vacuum technologies

Turbo-V 70
75 Vdc
Box Controller

Model SQ 188

(GB) INSTRUCTION MANUAL

87-900-938-01 (E)
JULY 2006

Turbo-V 70 75 Vdc Box Controller

VARIAN

vacuum technologies

Dear Customer,

Thank you for purchasing a VARIAN vacuum product. At VARIAN Vacuum Technologies we make every effort to ensure that you will be satisfied with the product and/or service you have purchased.

As part of our Continuous Improvement effort, we ask that you report to us any problem you may have had with the purchase or operation of our product. On the back side you find a Corrective Action Request form that you may fill out in the first part and return to us.

This form is intended to supplement normal lines of communications and to resolve problems that existing systems are not addressing in an adequate or timely manner.

Upon receipt of your Corrective Action Request we will determine the Root Cause of the problem and take the necessary actions to eliminate it. You will be contacted by one of our employees who will review the problem with you and update you, with the second part of the same form, on our actions.

Your business is very important to us. Please, take the time and let us know how we can improve.

Sincerely,

Sergio PIRAS

Vice President and General Manager
VARIAN Vacuum Technologies

Note: Fax or mail the Customer Request for Action (see backside page) to VARIAN Vacuum Technologies (Torino) - Quality Assurance or to your nearest VARIAN representative for onward transmission to the same address.

CUSTOMER REQUEST FOR CORRECTIVE / PREVENTIVE / IMPROVEMENT ACTION

TO : VARIAN VACUUM TECHNOLOGIES TORINO - QUALITY ASSURANCE

FAX N° : XXXX - 011 - 9979350

ADDRESS: VARIAN S.p.A. - Via F.lli Varian, 54 - 10040 Leinì (Torino) - Italy

E-MAIL : marco.marzio@varianinc.com

NAME	COMPANY	FUNCTION
_____	_____	_____

ADDRESS : _____

TEL. N° : _____ FAX N° : _____

E-MAIL : _____

PROBLEM / SUGGESTION :

_____

REFERENCE INFORMATION (model n°, serial n°, ordering information, time to failure after installation, etc.) :

_____

DATE _____

CORRECTIVE ACTION PLAN / ACTUATION LOG N° _____
(by VARIAN VTT)

_____

XXXX = Code for dialing Italy from your country (es. 01139 from USA; 00139 from Japan, etc.)

VARIAN

SAFETY SUMMARY 1
INTRODUCTION 1

TECHNICAL INFORMATION 2

DESCRIPTION 2
TURBO-V 70 75 VDC BOX CONTROLLER DESCRIPTION 2
CONTROLLER SPECIFICATIONS 2
CONTROLLER OUTLINE 3
INSTALLATION 4
Pump Connector 4
I/O Specifications 4
9-pin "D" Type Connector Pin Assignement 4
Serial Communication Port 5
RS 232 Communication Descriptions 5
Transmission Channel Characteristics 5
Message Structure 5
Examples 6
Serial Communication Windows 7
OPERATION 8
Switching on/off the Pump 8
Low Speed Activation/Deactivation 8
MAINTENANCE 8
Error Messages 8
Error Code Table..... 8
PCB JUMPERS 9

INTRODUCTION

Operators and service personnel must be aware of all hazards associated with this equipment. They must know how to recognize hazardous and potentially hazardous conditions, and know how to avoid them. The consequences of unskilled, improper, or careless operation of the equipment can be serious.

This product must only be operated and maintained by trained personnel. Every operator or service person must read and thoroughly understand operation/maintenance manuals and any additional information provided by Varian.

All warnings and cautions should be read carefully and strictly observed. Address any safety, operation, and/or maintenance questions to your nearest Varian office.

The following format is used in this manual to call attention to hazards:

WARNING!

Warning are used when failure to observe instructions or precautions could result in injury or death.

CAUTION!

Cautions are used when failure to observe instructions could result in damage to equipment, whether Varian supplied or other associated equipment.

NOTE

Information to aid the operator in obtaining the best performance from the equipment.

DISPOSAL

Meaning of the "WEEE" logo found in labels
The following symbol is applied in accordance with the EC WEEE (Waste Electrical and Electronic Equipment) Directive.
This symbol (**valid only in countries of the European Community**) indicates that the product it applies to must NOT be disposed of together with ordinary domestic or industrial waste but must be sent to a differentiated waste collection system.
The end user is therefore invited to contact the supplier of the device, whether the Parent Company or a retailer, to initiate the collection and disposal process after checking the contractual terms and conditions of sale.

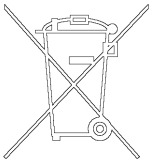

DESCRIPTION

The Turbo-V 70 box controller is a microprocessor-controlled, solid-state, frequency converter with self-diagnosis and protection features.

The controller drives the Turbo-V 70 pump series by controllling the voltage and current respect to the speed reached by pump.

It incorporates all the facilities required for the operation of the Turbo-V 70 pump series: pump start/stop, digital current and speed control, analog signals for external indicators.

The power is externally supplied.

All the input/output connections are performed on:

- 9 pin “D” type male connector attached to a cable 400 mm long for I/O and Electrical DC supply.
- Pump connection with 400 mm long cable.
- 9 pin “D” type connector for RS232 connection.

TURBO-V 70 75 VDC BOX CONTROLLER DESCRIPTION

The controller is a solid-state frequency converter which is driven by a single chip microcomputer and is composed of a PCB which includes all the circuitry necessary for its operation.

The microcomputer generates the variable output voltage according to the software and the gas load condition of the pump.

Moreover, it manages signals from sensors, input/output connection information, and gives output for a fully automatic operation.

The controller can be operated via remote signals through an RS-232 connection.

The controller can be operated in local mode through suitable switches connected between the input pins of the I/O connector.

CONTROLLER SPECIFICATIONS

Input: - Voltage - Current	 75 Vdc with 2 Vpp max ripple 1 A max.
Fuse	T 3 A
Output: - Voltage - Frequency - Power	 60 Vac nominal ±10%, 3-phase 1250 Hz, ±2% 54 W maximum
Compliance to Norms: - Radio interferences - ESD - BURST - Radiated RF immunity - Safety	 EN 55011 Class Group 1 EN 61000/4/2 EN 61000/4/4 EN 61000/4/3 EN 61010/1
Installation category	II
Operating temperature	0°C to + 40 °C
Storage temperature	-20°C to + 70°C
Cooling	Natural convection
Weight	0.5 Kg (1.1 lbs)

WARNING!

There can be 75 Vdc voltage referred to ground on the pump cable or on the serial connector.

CONTROLLER OUTLINE

The outline dimension for the controller are shown in the following figure:

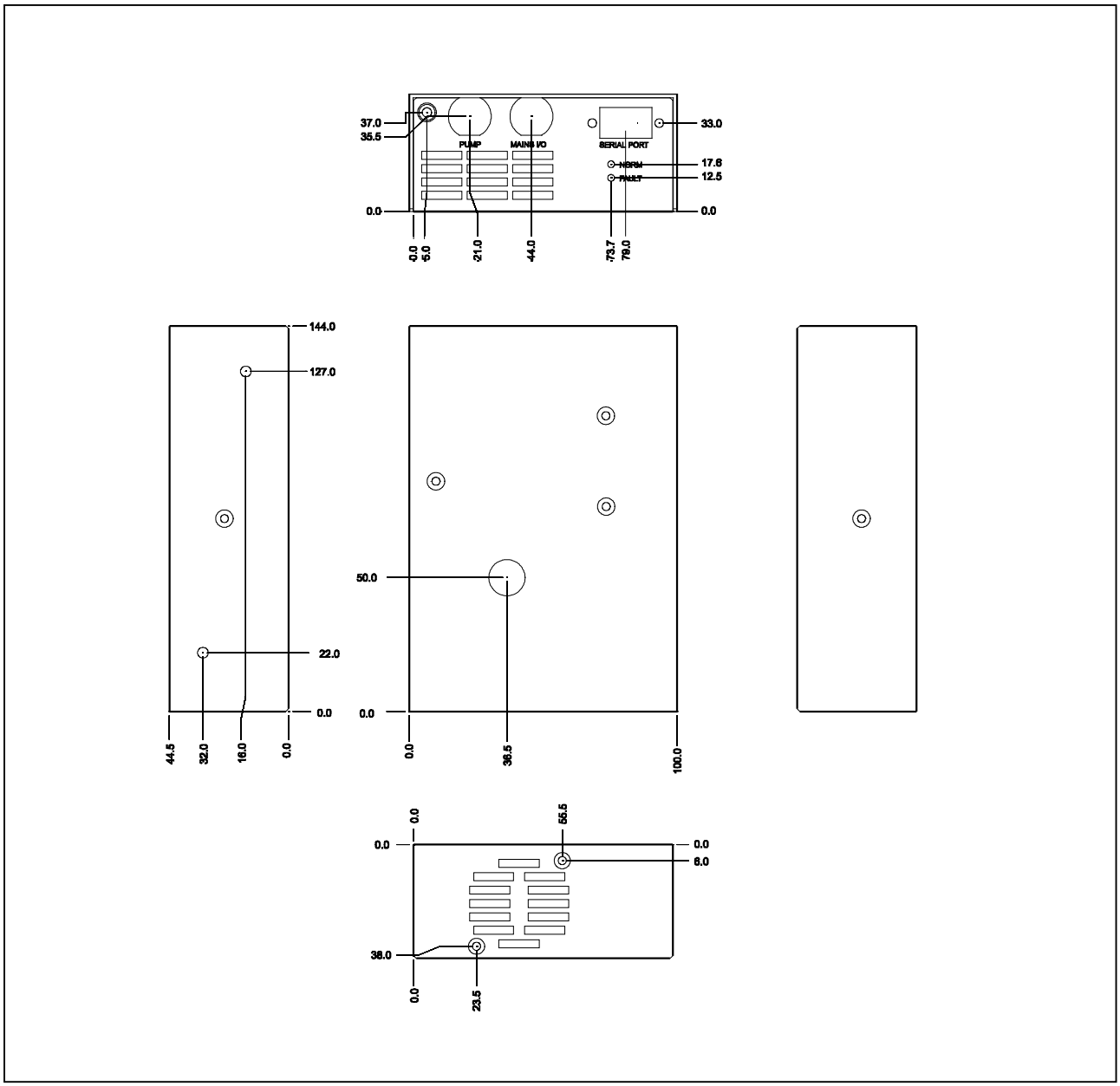

Controller outline

INSTALLATION

Inspect the controller for any shipping damage.

Should the controller be connected to a host computer via the-RS-232 interface, a suitable cable must be prepared.

In the following paragraphs are detailed the input/output signals.

NOTE

The box installed into the customer system must be positioned so that cold air (forced or natural convection) can flow around.

Pump Connector

The signals of J3 connector are the following:

- **Pin C** 60 Vac 3-phase output to pump motor stator (phase T).
- **Pin D** 60 Vac 3-phase output to. pump motor stator (phase S).
- **Pin B** 60 Vac 3-phase output to pump motor stator (phase R).
- **Pins A/F** Pump temperature sensor.
- **Pin E** Ground

I/O Specifications

START/STOP: - START command - STOP command	 Low <0.8 Vdc High 4 to 15 Vdc
Analog output: - Output impedence - Minimum load:	0 to 10 Vdc (proportional to speed) * (0 to 10 V ≡ 0 to 100% speed) 0.1 Ω 2 KΩ (5 mA)
Normal operation signal: - Open Collector	 Speed <80%: OFF (pull-up to 15 Vdc) Speed >80%: ON (<0.8 Vdc)
Current rating	60 mA max
Low speed command:	Low (<0.8 Vdc)

9-pin "D" Type Connector Pin Assignement

Pin number	**Description**
1	Start/Stop input: close to pin 5/6 to start the pump
2	Pump in Normal output: closed to pin 5/6 when pump speed is higher than 80% of full speed
3	Earth (Ground)
4	Analog output proportional to pump speed (positive)
5-6	Electrical supply (0 V)
9	Low speed input: close to pin 5/6 to select Low Speed mode
7-8	Electrical supply (75 V) (positive)

* Minimum speed reading in STOP condition = 100 Hz (6 KRPM)

Serial Communication Port

Communication serial port connections and mini- mum connection configuration are shown in the following figures. The communication port mating connector is supplied with the RS 232 PCB (AMP/Cannon or equivalent 9-pin "D" type male connector). The external cable (not supplied) between the host computer and the controller does not require crossed wires so that signals are connected correctly .
For example, the Transmit data signal from controller (pin 2) must be connected to the host computer's Receive data line (pin 2) and vice versa. Consult the host computer's instruction manual for its serial port connections

NOTE

Varian cannot guarantee compliance with FCC regulations for radiated emissions unless all external wiring is shielded, with the shield being terminated to the metal shroud on the O-subconnector. The cable should be secured to the connector with screws.

WARNING!

In order to avoid possible conflicts on the Serial Line, it is advisable to use a 3 wire shielded cable for the TxD, RxD and GND connections and to leave all the other pins unconnected.

RS 232 Communication Descriptions

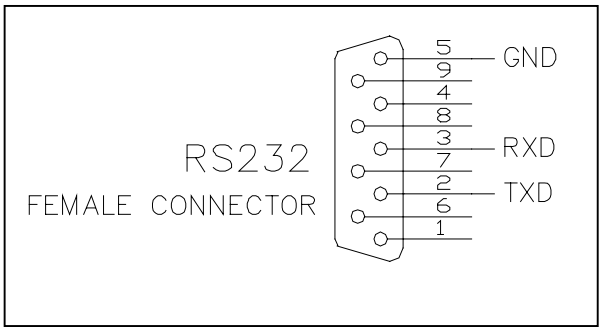

Communication RS 232 serial port connections

Transmission Channel Characteristics

levels:	RS 232/RS 422
baud rate:	9600/4800 programmable by a jumper on the board
character length:	8 bits
parity:	none
stop bit:	1 bit
protocoll:	master (PC) / slave (converter)

In this case the value to be assigned to the ADDRESS field must be 80 hex (for RS 232).

Message Structure

(request and answer have the same format)

The master system (PC) starts every session sending the following message to the slave units connected:

<STX> / <ADDR> + <WINDOW> + <COMMAND> + <DATA> + <ETX> + <CRC>

where:

<STX>=	0x02
<ADDR> =	0x80 (for RS 232 and RS 422 only)
<ADDR> =	0x80 + device number (0...31) 0xFF: brodcasting command (recognized by all the devices, it doesn't implicate any answer) (for RS 485 only)
<WINDOWS>=	'000'...' 999' window number the meaning of the window depends to the device type
<COMMAND>=	0x30 :window value reading 0x31 :window writing
<DATA> =	alphanumeric ASCII string containing, in the case of writing operation, the parameter to input into the window addressed by the field <WINDOW>This field may have variable length according to the data type contained in the window where you are working in. In the case of reading request of a window, the data field doesn't exist.
<ETX>=	0x03
<CRC>=	XOR among all the characters following <STX>=(with exception of <STX>), including the end character <ETX> hexadecimally encoded by two ASCII characters.

When a slave device is addressed by the master:

1) In case of reading request of the value contained in a window, the slave answers a string equal to the one sent by the master but in addition there is the field <DATA> containing the value of the window. The format of the field <DATA> depends to the window type.

   The different types are:

	Length	**Characters Permitted**
Logic (L)	1	‘0’=OFF ‘1’=ON
Numeric (N)	6	‘0’...’9’ (Justifield to the right with ‘0’)
Alphanumeric (A)	max 10	‘ ‘...’_’

Examples

Command : START
Source : PC
Destination : Inverter

02	80	30	30	30	31	31	03	42	33
STX	ADDR	WINDOW			WR	ON	ETX	CRC	

Source : Inverter
Destination : PC

02	80	06	03	38	35
STX	ADDR	ACK	ETX	CRC	

Command : STOP
Source : PC
Destination : Inverter

02	80	30	30	30	31	30	03	42	32
STX	ADDR	WINDOW			WR	OF F	ETX	CRC	

Source : Inverter
Destination : PC

02	80	06	03	38	35
STX	ADDR	ACK	ETX	CRC	

Command : SOFT-START (ON)
Source : PC
Destination : Inverter

02	80	31	30	30	31	31	03	42	32
STX	ADDR	WINDOW			WR	ON	ETX	CRC	

Source : Inverter
Destination : PC

02	80	06	03	38	35
STX	ADDR	ACK	ETX	CRC	

Command : SOFT-START (OFF)
Source : PC
Destination : Inverter

02	80	31	30	30	31	30	03	42	33
STX	ADDR	WINDOW			WR	OF F	ETX	CRC	

Source : Inverter
Destination : PC

02	80	06	03	38	35
STX	ADDR	ACK	ETX	CRC	

Command : CURRENT
Source : PC
Destination : Inverter

02	80	32	30	30	30	03	38	31
STX	ADDR	WINDOW			RD	ETX	CRC	

Source : Inverter
Destination : PC

02	80	32	30	30	30	30	30	30	2E	30	30	03	39	44
STX	ADD	WINDOW			RD	000.00						ETX	CRC	

Command : FREQUENCY
Source : PC
Destination : Inverter

02	80	32	30	33	30	03	38	32
STX	ADDR	WINDOW			RD	ETX	CRC	

Source : Inverter
Destination : PC

02	80	32	30	33	30	30	30	30	30	34	32	03	38	34
STX	ADD	WINDOW			RD	000042						ETX	CRC	

Command : ERR-CODE
Source : PC
Destination : Inverter

02	80	32	30	36	30	03	38	37
STX	ADDR	WINDOW			RD	ETX	CRC	

Source : Inverter
Destination : PC

02	80	32	30	36	30	30	30	30	30	30	30	03	38	37
STX	ADD	WINDOW			RD	000000						ETX	CRC	

Serial Communication Windows

WIN	TYPE	R	W	Description
000	L	X	X	START/STOP (1= START ; 0= STOP)
008	L	X	X	REMOTE/SERIAL Configuration (1= Remote ; 0= Serial)
100	L	X	X	SOFT START YES/NO (1= YES ; 0= NO) Default= 0
107	L	X	X	ACTIVE STOP (0=NO; 1=YES) Default= 1
108	N	X	X	BAUD RATE (3-4) [4800-9600] Default= 4
109	L		X	PUMP LIFE RESET [Write “1” to Reset]
120	N	X	X	SET ROTATIONAL FREQUENCY [Hz] 150 Hz < = F_imp < = FMAX
121	N	X	X	MAX SETTABLE ROTATIONAL FREQUENCY [Hz] F<=F_MAX_ABS
130	N	X		RAMP CURRENT [mA]
200	N	X		CURRENT [mA]
201	N	X		VOLTAGE[V]
202	N	X		POWER [W]
203	N	X		DRIVING FREQUENCY [Hz]
204	N	X		PUMP TEMPERATURE [°C]
205	N	X		STATUS [0=stop; 1=interlock; 2=ramp; 3=regulation; 4=brake; 5=normal; 6=failure]
206	N	X		ERROR CODE: 7 | | | | | | | 0 Too high load Short circuit SoftStart Not Ended RunUpTime Not Reached No connection Pump overtemp Controller overtemp Power fail
211	N	X		PUMP SENSOR TEMPERATURE READING [208= 25°C - 128= 60°C]
216	N	X		AMBIENT SENSOR TEMPERATURE READING
300	N	X		CYCLE TIME [min]
301	N	X		CYCLE NUMBER
302	N	X		PUMP LIFE [h]
319	A	X		Controller Model
320	A	X		Base Pump Model Number (8 characters)
321	A	X		Modified Standard Model Number (4 characters)
323	A	X		Controller Serial Number (5 characters)
325	A	X		Electrical Modification Level (10 characters)
400	A	X		CRC PROGRAM LISTING [QE7xxxx]
401	A	X		CRC BOOTLOADER [BL1xxxx]
402	A	X		CRC PARAMETER LISTING [PA7xxxx]
404	A	X		CRC FILE PARAMETER STRUCTURE
406	A	X		PROGRAM LISTING CODE & REVISION
407	A	X		PARAMETER LISTING CODE & REVISION
500	L		X	MONITOR MODE

WIN = Window
R = Read
W = Write

L = Logical
N = Numeric
A = Alphanumeric

OPERATION

Make all vacuum manifold and electrical connections and refer to Turbo-V pump instruction manual prior to operating the Turbo-V controller.

WARNING

To avoid injury to personnel and damage to the equipment, if the pump is laying on a table make sure it is steady.
Never operate the Turbo-V pump if the pump inlet is not connected to the system or blanked off.

The controller operates completely automatically after the remote start command is given.

Switching on/off the Pump

To switch on the pump it is necessary to short circuit pin 1 and pins 5-6 (ground) of the 9 pin “D” type connector.

To switch off the pump it is necessary to remove the short circuit between pins 1 and 5-6.

Analog output: 0 to 10 Vdc proportional to speed (0 to 10 V ≡ 0 to 100% speed).
This output is active also during the pump “slow down” phase after a Stop command.

Low Speed Activation/Deactivation

To activate the Low Speed status it is necessary to connect pin 9 of the 9-pin connector to pin 5-6 (ground) of the 9-pin “D” type connector.

To deactivate the Low Speed status it is necessary to disconnect pin 9 from pin 15 (ground) of the same connector.

The low speed frequency is equal to 830 Hz.

MAINTENANCE

Replacement controllers are available on an advance exchange basis through Varian. If necessary, information is provided to aid the operator in determining malfunctions and corrective steps to be taken.

WARNING

Voltages developed in the unit are dangerous and may be fatal. Service must be performed by authorized personnel only.

Error Messages

For a certain type of failure, the controller will self-diagnose the error and the following messages will be displayed.

The controller signals the error occurred by means of a diagnostic LED located on the box (FAULT), and on the RS 232 port.

The LED blinks in a coded mode:
it flashes a number of time equal to the error
code (see the following table) and then stays off, and so on.

“Status” LED (on the box)

OFF	in STOP
Blinking	in STARTING
ON	in NORMAL

Error Code Table

LED BLINKING NUMBER	DESCRIPTION
0	No error
1	Output overcurrent
2	Not connected pump
3	Pump overtemperature
4	Controller overtemperature
5	Run-up overtime
6	Soft start overtime
7	Too High Load
8	Power Failure

PCB JUMPERS

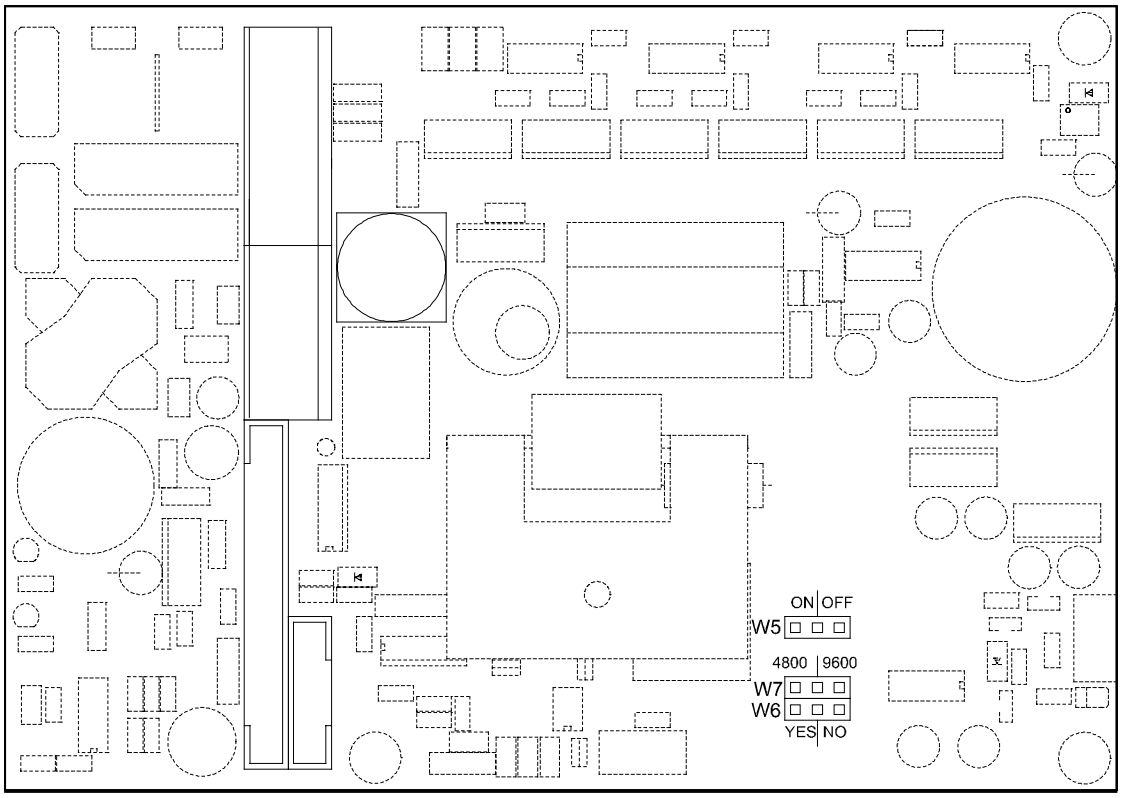

W5 = FLASH EPROM PROGRAMMING
W6 = SOFT START SELECTION
W7 = BAUD RATE SELECTION

VARIAN

Request for Return

ISO 9001 REGISTERED

1. A Return Authorization Number (RA#) **WILL NOT** be issued until this Request for Return is completely filled out, signed and returned to Varian Customer Service.
2. Return shipments shall be made in compliance with local and international **Shipping Regulations** (IATA, DOT, UN).
3. The customer is expected to take the following actions to ensure the **Safety** of workers at Varian: (a) Drain any oils or other liquids, (b) Purge or flush all gasses, (c) Wipe off any excess residues in or on the equipment, (d) Package the equipment to prevent shipping damage, (for Advance Exchanges please use packing material from replacement unit).
4. Make sure the shipping documents clearly show the RA# and then return the package to the Varian location nearest you.

North and South America
Varian Vacuum Technologies
121 Hartwell Ave
Lexington, MA 02421
Phone : +1 781 8617200
Fax: +1 781 8609252

Europe and Middle East
Varian SpA
Via Flli Varian 54
10040 Leini (TO) – ITALY
Phone: +39 011 9979111
Fax: +39 011 9979330

Asia and ROW
Varian Vacuum Technologies
Local Office

CUSTOMER INFORMATION

Company name: ……

Contact person: Name: …… Tel: ……

Fax: …… E-Mail: ……

Ship Method: …… Shipping Collect #: …… P.O.#: ……

Europe only: VAT reg. Number: …… *USA only*: ☐ Taxable ☐ Non-taxable

Customer Ship To: …… Customer Bill To: ……

……

……

……

……

PRODUCT IDENTIFICATION

Product Description	Varian P/N	Varian S/N	Purchase Reference

TYPE OF RETURN *(check appropriate box)*

☐ Paid Exchange ☐ Paid Repair ☐ Warranty Exchange ☐ Warranty Repair ☐ Loaner Return
☐ Credit ☐ Shipping Error ☐ Evaluation Return ☐ Calibration ☐ Other ……

HEALTH and SAFETY CERTIFICATION

Varian Vacuum Technologies **CAN NOT ACCEPT** any equipment which contains **BIOLOGICAL HAZARDS** or **RADIOACTIVITY**. Call Varian Customer Service to discuss alternatives if this requirement presents a problem.

The equipment listed above (check one):

☐ **HAS NOT** been exposed to any toxic or hazardous materials

OR

☐ **HAS** been exposed to any toxic or hazardous materials. In case of this selection, check boxes for any materials that equipment was exposed to, check all categories that apply:

☐ Toxic ☐ Corrosive ☐ Reactive ☐ Flammable ☐ Explosive ☐ Biological ☐ Radioactive

List all toxic or hazardous materials. Include product name, chemical name and chemical symbol or formula.

……

Print Name: …… Customer Authorized Signature: ……

Print Title: …… Date: ……/……/……

NOTE: If a product is received at Varian which is contaminated with a toxic or hazardous material that was not disclosed, **the customer will be held responsible** for all costs incurred to ensure the safe handling of the product, and **is liable** for any harm or injury to Varian employees as well as to any third party occurring as a result of exposure to toxic or hazardous materials present in the product.

Do not write below this line

Notification (RA)#: …… Customer ID#: …… Equipment #: ……

VARIAN

Request for Return

ISO 9001 REGISTERED

FAILURE REPORT

TURBO PUMPS and TURBOCONTROLLERS

		POSITION	PARAMETERS	
☐ Does not start	☐ Noise	☐ Vertical	Power:	Rotational Speed:
☐ Does not spin freely	☐ Vibrations	☐ Horizontal	Current:	Inlet Pressure:
☐ Does not reach full speed	☐ Leak	☐ Upside-down	Temp 1:	Foreline Pressure:
☐ Mechanical Contact	☐ Overtemperature	☐ Other:	Temp 2:	Purge flow:
☐ Cooling defective		……	OPERATION TIME:	

TURBOCONTROLLER ERROR MESSAGE:

ION PUMPS/CONTROLLERS

☐ Bad feedthrough	☐ Poor vacuum
☐ Vacuum leak	☐ High voltage problem
☐ Error code on display	☐ Other

Customer application:

VALVES/COMPONENTS

☐ Main seal leak	☐ Bellows leak
☐ Solenoid failure	☐ Damaged flange
☐ Damaged sealing area	☐ Other

Customer application:

LEAK DETECTORS

☐ Cannot calibrate	☐ No zero/high backround
☐ Vacuum system unstable	☐ Cannot reach test mode
☐ Failed to start	☐ Other

Customer application:

INSTRUMENTS

☐ Gauge tube not working	☐ Display problem
☐ Communication failure	☐ Degas not working
☐ Error code on display	☐ Other

Customer application:

PRIMARY PUMPS

☐ Pump doesn't start	☐ Noisy pump (describe)
☐ Doesn't reach vacuum	☐ Over temperature
☐ Pump seized	☐ Other

Customer application:

DIFFUSION PUMPS

☐ Heater failure	☐ Electrical problem
☐ Doesn't reach vacuum	☐ Cooling coil damage
☐ Vacuum leak	☐ Other

Customer application:

FAILURE DESCRIPTION

(Please describe in detail the nature of the malfunction to assist us in performing failure analysis):

NOTA: Su richiesta questo documento è disponibile anche in Tedesco, Italiano e Francese.
REMARQUE : Sur demande ce document est également disponible en allemand, italien et français.
HINWEIS: Auf Aufrage ist diese Unterlage auch auf Deutsch, Italienisch und Französisch erhältlich.

Sales and Service Offices

France and Benelux
Varian s.a.
7 Avenue des Tropiques
Z.A. de Courtaboeuf - B.P. 12
Les Ulis cedex (Orsay) 91941
France
Tel: (33) 1 69 86 38 84
Fax: (33) 1 69 86 29 88
From Benelux Tel: (31) 118 67 15 70
From Benelux Fax: (31) 118 67 15 69

Canada
Central coordination through:
Varian Vacuum Technologies
121 Hartwell Avenue
Lexington, MA 02421
USA
Tel: (781) 861 7200
Fax: (781) 860 5437
Toll Free # 1 (800) 882 7426

China
Varian Technologies - Beijing
Rm 1648 Central Tower South Wing
Beijing Junefield Plaza
No. 10 XuanWuMenWai Street
Beijing 100052
P.R. China
Tel: (86) 10 63108550
Fax: (86) 10 63100141
Toll Free: 800 820 6556

Germany and Austria
Varian Deutschland GmbH
Alsfelder Strasse 6
Postfach 11 14 35
64289 Darmstadt
Germany
Tel: (49) 6151 703 353
Fax: (49) 6151 703 302

India
Varian India PVT LTD
101-108, 1st Floor
1010 Competent House
7, Nangal Raya Business Centre
New Delhi 110 046
India
Tel: (91) 11 28521171
Fax: (91) 11 28521173

Italy
Varian Inc.
Vacuum Technologies
Via F.lli Varian 54
10040 Leini, (Torino)
Italy
Tel: (39) 011 997 9 111
Fax: (39) 011 997 9 350

Japan
Varian Vacuum Technologies
Sumitomo Shibaura Building, 8th Floor
4-16-36 Shibaura
Minato-ku, Tokyo 108
Japan
Tel: (81) 3 5232 1253
Fax: (81) 3 5232 1263
Toll Free: 0120 655 040

Korea
Varian Technologies Korea, Ltd
Shinsa 2nd Bldg. 2F
966-5 Daechi-dong
Kangnam-gu, Seoul
Korea 135-280
Tel: (82) 2 3452 2452
Fax: (82) 2 3452 2451
Toll Free: 080 222 2452

Mexico
Varian, S. de R.L. de C.V.
Concepcion Beistegui No 109
Col Del Valle
C.P. 03100
Mexico, D.F.
Tel: (52) 5 523 9465
Fax: (52) 5 523 9472

Taiwan
Varian Technologies Asia Ltd.
14F-6, No.77, Hsin Tai Wu Rd., Sec. 1
Hsi chih, Taipei Hsien
Taiwan, R.O.C.
Tel: (886) 2 2698 9555
Fax: (886) 2 2698 9678
Toll Free: 0800 051342

UK and Ireland
Varian Ltd.
6 Mead Road
Oxford Industrial Park - Yarnton
Oxford OX5 1QU - England
Tel: (44) 1865 291570
Fax: (44) 1865 291571

United States
Varian Vacuum Technologies
121 Hartwell Avenue
Lexington, MA 02421
USA
Tel: (781) 861 7200
Fax: (781) 860 5437

Other Countries
Varian Inc.
Vacuum Technologies
Via F.lli Varian 54
10040 Leini, (Torino)
Italy
Tel: (39) 011 997 9 111
Fax: (39) 011 997 9 350

Customer Support & Service:

North America
Toll-Free: 1 800 882 7426
vtl.technical.support@varianinc.com

Europe
Tel: 00 800 234 234 00
vtt.technical.support@varianinc.com

China
Toll-Free: 800 820 8266
vtc.technical.support@varianinc.com

Japan
Toll-Free: 0120 655 040
vtj.technical.support@varianinc.com

Korea
Toll-Free: 080 222 2452
vtk.technical.support@varianinc.com

Taiwan
Toll-Free: 0 800 051 342
vtw.technical.support@varianinc.com

Worldwide Web Site, Catalog and Order On-line:
www.varianinc.com

Representative in most countries

VARIAN

03/06