VARIAN

vacuum technologies

Heavy Duty Vent Valve

Model 969-9842

(I) MANUALE DI ISTRUZIONI

(D) BEDIENUNGSHANDBUCH

(F) NOTICE DE MODE D'EMPLOI

(GB) INSTRUCTION MANUAL

87-900-949-01 (C)
JULY 2006

Heavy Duty Vent Valve

VARIAN

vacuum technologies

Dear Customer,

Thank you for purchasing a VARIAN vacuum product. At VARIAN Vacuum Technologies we make every effort to ensure that you will be satisfied with the product and/or service you have purchased.

As part of our Continuous Improvement effort, we ask that you report to us any problem you may have had with the purchase or operation of our product. On the back side you find a Corrective Action Request form that you may fill out in the first part and return to us.

This form is intended to supplement normal lines of communications and to resolve problems that existing systems are not addressing in an adequate or timely manner.

Upon receipt of your Corrective Action Request we will determine the Root Cause of the problem and take the necessary actions to eliminate it. You will be contacted by one of our employees who will review the problem with you and update you, with the second part of the same form, on our actions.

Your business is very important to us. Please, take the time and let us know how we can improve.

Sincerely,

Sergio PIRAS

Vice President and General Manager
VARIAN Vacuum Technologies

Note: Fax or mail the Customer Request for Action (see backside page) to VARIAN Vacuum Technologies (Torino) - Quality Assurance or to your nearest VARIAN representative for onward transmission to the same address.

CUSTOMER REQUEST FOR CORRECTIVE / PREVENTIVE / IMPROVEMENT ACTION

TO : VARIAN VACUUM TECHNOLOGIES TORINO - QUALITY ASSURANCE

FAX N° : XXXX - 011 - 9979350

ADDRESS: VARIAN S.p.A. - Via F.lli Varian, 54 - 10040 Leinì (Torino) - Italy

E-MAIL : marco.marzio@varianinc.com

NAME	COMPANY	FUNCTION
_____	_____	_____

ADDRESS : _____

TEL. N° : _____ FAX N° : _____

E-MAIL : _____

PROBLEM / SUGGESTION :

_____

REFERENCE INFORMATION (model n°, serial n°, ordering information, time to failure after installation, etc.) :

_____

DATE _____

CORRECTIVE ACTION PLAN / ACTUATION LOG N° _____
(by VARIAN VTT)

_____

XXXX = Code for dialing Italy from your country (es. 01139 from USA; 00139 from Japan, etc.)

VARIAN

PROCEDURA PER L'INSTALLAZIONE 1

ANLEITUNG ZUR INSTALLATION 3

PROCÉDURE POUR L'INSTALLATION 5

INSTALLATION PROCEDURE 7

PROCEDURA PER L'INSTALLAZIONE DEL KIT HEAVY DUTY VENT VALVE

GENERALITÀ

Il Kit "Heavy Duty Vent Valve" comprende un'unità di controllo ed una valvola, che realizzano un sistema completo per la ventilazione automatica della pompa Turbo-V nella fase di spegnimento o nel caso si verifichi una caduta di tensione. La valvola in condizioni di riposo (senza alimentazione) è normalmente aperta. L'attivazione avviene in modo elettromagnetico, mentre il fissaggio (Viton-sealed) viene realizzato tramite una flangia NW16 sul foro di alto vuoto della pompa. L'ingresso della valvola è provvisto di un connettore Swagelock da 1/4" per la connessione alla linea di azoto.

L'unità di controllo viene alimentata dal Controller Turbo-V e viene attivata con un ritardo prefissato di circa 1 secondo per evitare ventilazioni inopportune durante una caduta di tensione temporanea e per permettere la chiusura delle valvole di sistema prima della ventilazione.

CARATTERISTICHE TECNICHE

Unità di controllo

- Tensione di ingresso — 120 Vca ± 10%
  - frequenza — da 50 a 60 Hz
  - corrente — 0,15 A
- Tensione di uscita — 24 Vcc ± 5%
  - potenza (max) — 11 W
- Ritardo — circa 1 secondo
- Temperatura operativa — da 0 a 40 °C
- Temperatura di immagazzinamento — da -20 a 50 °C

Cavi di connessione

- Ingresso — lungo 0,5 metri, 3 fili
- Uscita alla valvola — lungo 5 metri, 3 fili
- Peso (con cavo) — 0,5 Kg (1,1 lbs)

Vent valve

- Stato valvola — Normalmente aperta (chiusa quando viene alimentata)
- Connessione di alto vuoto — NW16
- Ingresso aria — Swagelock 1/4"
- Dimensione foro — 3 mm
- Gamma di pressioni — da 10^{-6} mbar a 2 bar (da10^{-7} Torr a 2 atm)
- Leak rate — $\leq 5x10^{-8}$ mbar l/s
- Vita — 1 milione di cicli
- Tensione di ingresso — 24 Vcc ±10%
  - potenza — 11 W
- Temperatura di bakeout — 60 °C
- Peso (senza cavo) — 0,4 Kg (0,96 lb)

La figura seguente riporta le dimensioni di ingombro del Kit Heavy Duty Vent Valve.

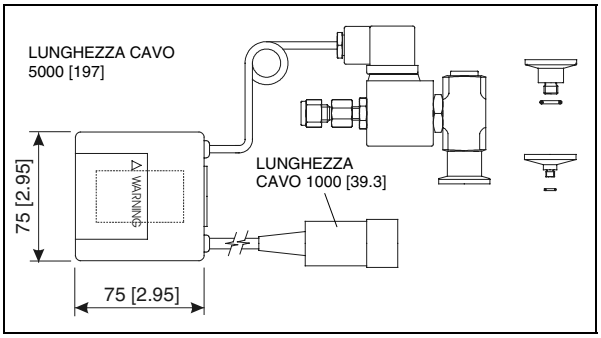

Dimensioni in mm [pollici]

INSTALLAZIONE

In figura sono riportati i vari componenti presenti nel Kit Heavy Duty Vent Valve. Tali componenti sono forniti disassemblati; sarà quindi cura del cliente provvedere all'assemblaggio del Kit.

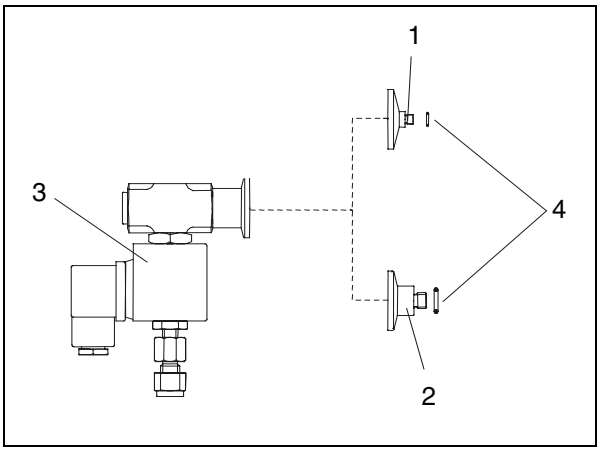

Kit Heavy Duty Vent Valve

1. Flangia NW16 - M5
2. Flangia NW16 - M5
3. Valvola
4. O-ring

Il kit contiene due adattatori NW16 M8 o M5. Sarà cura del cliente utilizzare quello specifico per le proprie esigenze.

ATTENZIONE

Durante la fase di assemblaggio del kit, fare attenzione a non svitare la ghiera ed il dado di fissaggio della bobina interna alla valvola.

Completato l'assemblaggio, procedere con l'installazione sulla pompa.

La seguente figura riporta un'installazione tipica su una pompa.

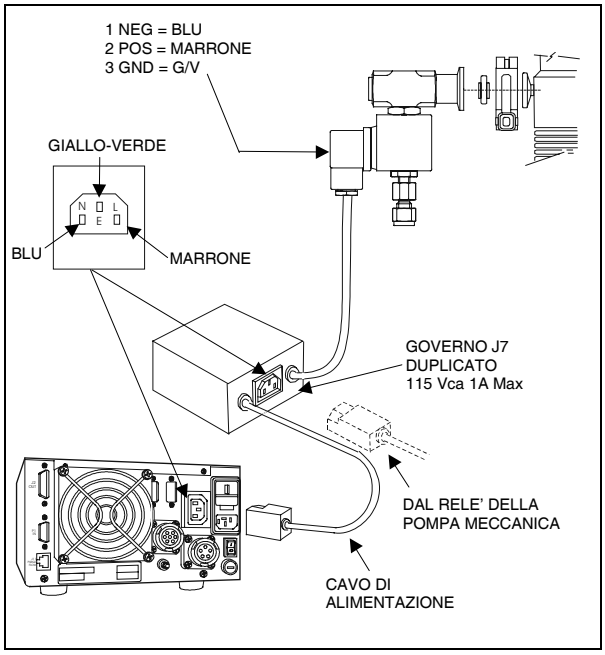

Installazione su pompa con tappo a vite

Dopo aver completato l'installazione meccanica, collegare il cavo di alimentazione dell'unità di controllo dell'Heavy Duty Vent Valve al rispettivo connettore sul pannello posteriore del Turbo pump Controller.

ATTENZIONE

Prima di alimentare il kit, assicurarsi che la tensione di uscita presente sul connettore sia 115 Vca.

SMALTIMENTO

Significato del logo "WEEE" presente sulle etichette.

Il simbolo qui sotto riportato è applicato in ottemperanza alla direttiva CE denominata "WEEE". Questo simbolo **(valido solo per i paesi della Comunità Europea)** indica che il prodotto sul quale è applicato, NON deve essere smaltito insieme ai comuni rifiuti domestici o industriali, ma deve essere avviato ad un sistema di raccolta differenziata. Si invita pertanto l'utente finale a contattare il fornitore del dispositivo, sia esso la casa madre o un rivenditore, per avviare il processo di raccolta e smaltimento, dopo opportuna verifica dei termini e condizioni contrattuali di vendita.

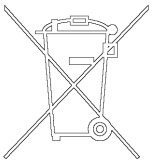

ANLEITUNG ZUR INSTALLATION DER BAUGRUPPE "HEAVY DUTY VENT VALVE"

ALLGEMEINES

Die Baugruppe “Heavy Duty Vent Valve” umfasst eine Steuereinheit und ein Ventil, wodurch ein komplettes System zur automatischen Belüftung der Turbo-V - Pumpe beim Ausschalten oder bei Spannungsabfall entsteht. In Ruhestellung (ohne Versorgung) ist dieses Ventil geöffnet.
Es wird elektromagnetisch betätigt. Seine Befestigung (Viton-sealed) erfolgt mit einem Flansch NW16 an der Bohrung für Hochvakuum der Pumpe. Am Eingang des Ventils befindet sich ein 1/4” Swagelock Anschluss zur Verbindung mit der Stickstoffleitung.

Die Steuereinheit wird von der Turbo-V Controller versorgt und die Steuereinheit wird mit einer auf zirka 1 Sekund voreingestellten Verzögerung eingeschaltet, um eine unerwünschte Belüftung bei zeitweisem Spannungsabfall zu verhindern und um das Schließen der Systemventile vor der Belüftung zu ermöglichen.

TECHNISCHE DATEN

Steuereinheit

- Eingangsspannung — 120 V~ ± 10%
  - Frequenz — von 50 bis 60 Hz
  - Strom 0,15 A
- Ausgangsspannung — 24 V= ± 5%
  - Leistung (max) — 11 W
- Verzögerung — ca. 1 Sek
- Betriebstemperatur — von 0 bis 40 °C
- Lagerungstemperatur — von -20 bis 50 °C

Anschlusskabel

- Eingang — Länge = 0,5 m, 3 Adern
- Ausgang zum Ventil — Länge = 5 m, 3 Adern
- Gewicht (mit Kabel) — 5 Kg (1,1 lbs)

Vent valve

- Ventilzustand — offen (bei Versorgung geschlossen)
- Hochvakuumanschluss — NW16
- Lufteingang — Swagelock 1/4"
- Bohrungsdurchmesser — 3 mm
- Druckwerte — von 10^{-6} mbar bis 2 bar (von10^{-7} Torr bis 2 atm)
- Leak rate — ≤ $5x10^{-8}$ mbar l/s
- Lebensdauer — 1 Million Zyklen
- Eingangsspannung — 24 V ±10%
  - Leistung — 11 W
- Bakeout - Temperatur — 60 °C
- Gewicht (ohne Kabel) — 0,4 Kg (0,96 lb)

Auf nachstehender Abbildung sind die Abmessungen des Ventils "Heavy Duty Vent Valve" angegeben.

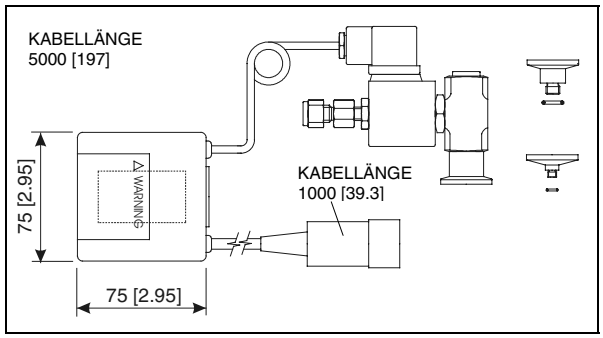

Maße in mm [Zoll]

INSTALLATION

In der Abbildung sind die einzelnen Bauteile der Baugruppe "Heavy Duty Vent Valve" dargestellt. Diese Bauteile werden lose geliefert und müssen daher vom Kunden zusammengebaut werden.

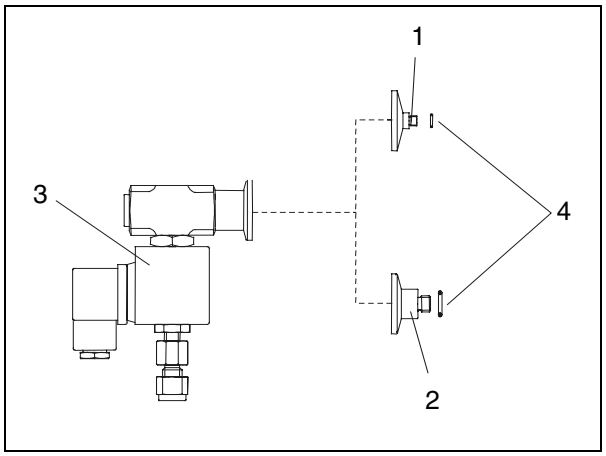

Bauteile des "Heavy Duty Vent Valve"

1. Flansch NW16 - M5
2. Flansch NW16 - M5
3. Ventil
4. O-Ring

Die Baugruppe enthält zwei NW16 M8 oder M5 Adapter. Der Kunde verwendet jenen Adapter, der seinen Anforderungen entspricht.

ACHTUNG

Beim Zusammenbau dürfen die Nutmutter und die Befestigungsmutter der Spule, die sich im Ventil befindet, nicht losgeschraubt werden.

Nach dem Zusammenbau muss das Ventil auf der Pumpe installiert werden.

Auf der folgenden Abbildung ist eine typische Installation an einer Pumpe dargestellt.

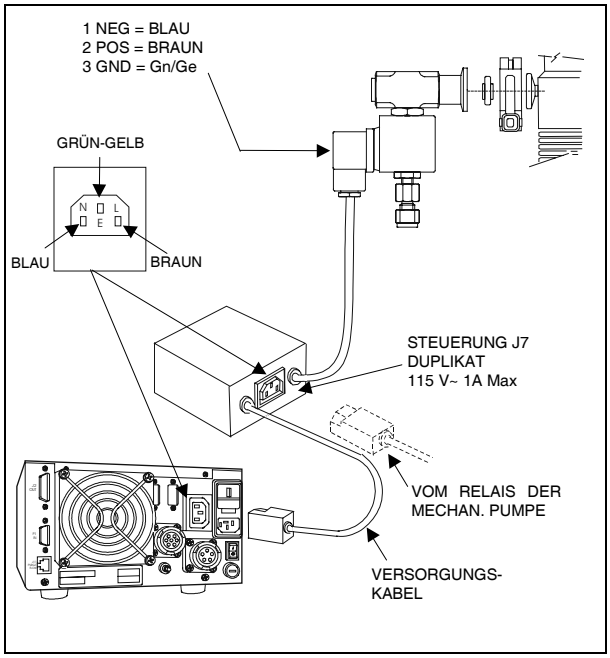

Installation auf Pumpe mit Verschlussschraube

Nach erfolgter mechanischer Installation das Verbindungskabel der Steuereinheit des "Heavy Duty Vent Valve" an den Stecker an der hinteren Platte der Steuerung der Turbopumpe anschließen.

ACHTUNG

Sicherstellen, dass die am Stecker vorhandene Ausgangsspannung 115 V~ beträgt, bevor die Baugruppe unter Spannung gesetzt wird.

ENTSORGUNG

Bedeutung des "WEEE" Logos auf den Etiketten.
Das folgende Symbol ist in Übereinstimmung mit der EU-Richtlinie WEEE (Waste Electrical and Electronic Equipment) angebracht.
Dieses Symbol (**nur in den EU-Ländern gültig**) zeigt an, dass das betreffende Produkt nicht zusammen mit Haushaltsmüll entsorgt werden darf sondern einem speziellen Sammelsystem zugeführt werden muss.
Der Endabnehmer sollte daher den Lieferanten des Geräts - d.h. die Muttergesellschaft oder den Wiederverkäufer - kontaktieren, um den Entsorgungsprozess zu starten, nachdem er die Verkaufsbedingungen geprüft hat.

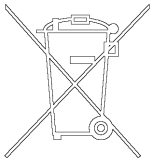

PROCÉDURE POUR L'INSTALLATION DU KIT "HEAVY DUTY VENT VALVE"

GÉNÉRALITÉS

Le kit "Heavy Duty Vent Valve" comporte un système de commande et une valve qui composent un dispositif complet pour la ventilation automatique de la pompe Turbo-V pendant la phase d'extinction ou en cas de chute de tension. La valve en condition de repos (non alimentée) est normalement ouverte.

L'activation est réalisée de manière électromagnétique, alors que la fixation (Viton-sealed) est réalisée grâce à une joue de type NW16 sur l'orifice pour vide de la pompe. L'entrée de la valve est équipée d'un connecteur Swagelock de 1/4" pour la connexion à la ligne d'azote.

Le système de commande est alimenté par le gérant Turbo-V et il est activé avec un retard prédéfini d'une seconde environ pour éviter une ventilation inopportune pendant une chute de tension temporaire et pour permettre aux valves de système de se fermer avant la ventilation.

CARACTÉRISTIQUES TECHNIQUES

Système de commande

- Tension en entrée — 120 Vca ± 10%
  - fréquence — de 50 à 60 Hz
  - courant — 0,15 A
- Tension en sortie — 24 Vcc ± 5%
  - puissance (maxi) — 11 W
- Retard — 1 seconde environ
- Température d'exercice — de 0 à 40 °C
- Température de stockage — de -20 à 50 °C

Câbles de connexion

- Entrée — 0,5 mètres de long, 3 fils
- Sorties à la valve — 5 mètre de long, 3 fils
- Poids (avec câble) — 0,5 Kg (1,1 lbs)

Vent Valve

- Etat valve — Ouverte normalement (fermée sous alimentation)
- Connexion du vide — NW16
- Entrée d'air — Swagelock 1/4"
- Dimension orifice — 3 mm
- Gamme de pressions — de 10^{-6} mbar à 2 bar (de10^{-7} Torr à 2 atm)
- Leak rate — ≤ $5x10^{-8}$ mbar l/s
- Durée de vie — 1 million de cycles
- Tension en entrée — 24 Vcc ±10%
  - puissance — 11 W
- Température de bakeout — 60 °C
- Poids (sans câble) — 0,4 Kg (0,96 lb)

La figure ci-dessous indique les dimensions d'encombrement du kit "Heavy Duty Vent Valve".

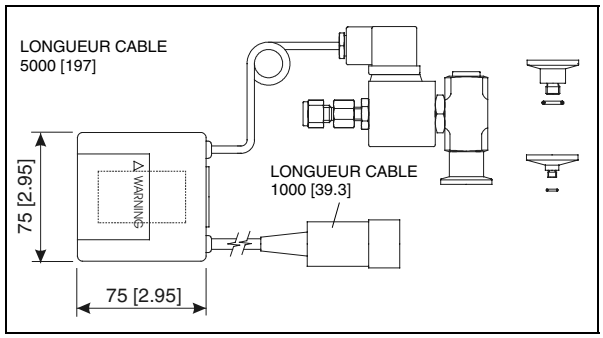

Dimensions en mm (pouces)

INSTALLATION

La figure illustre les différents composants présents dans le kit "Heavy Duty Vent Valve". Ces composants sont fournis démontés; il faudra donc que le client fasse l'assemblage du kit.

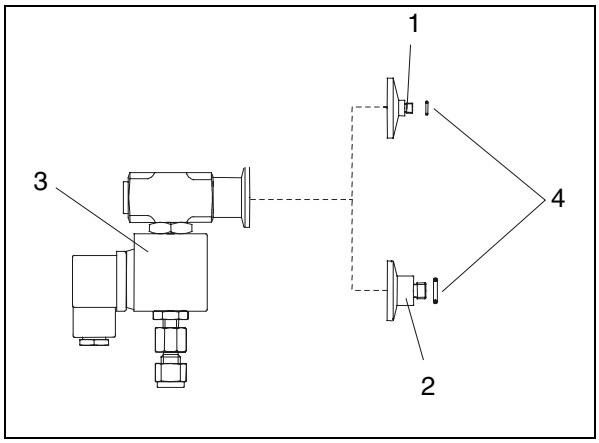

Kit "Heavy Duty Vent Valve"

1. Joue NW16 - M5
2. Joue NW16 - M5
3. Valve
4. Joint torique

Le kit contient deux adaptateurs NW16 M8 ou M5. Ce sera au client d'utiliser celui qui convient à ses nécessités.

ATTENTION

Pendant la phase d'assemblage du kit, il faut faire attention à ne pas dévisser la baïonnette et l'écrou de fixation de la bobine interne à la valve.

Une fois l'assemblage effectué, procéder à l'installation sur la pompe.

La figure ci-après illustre une installation caractéristique sur une pompe.

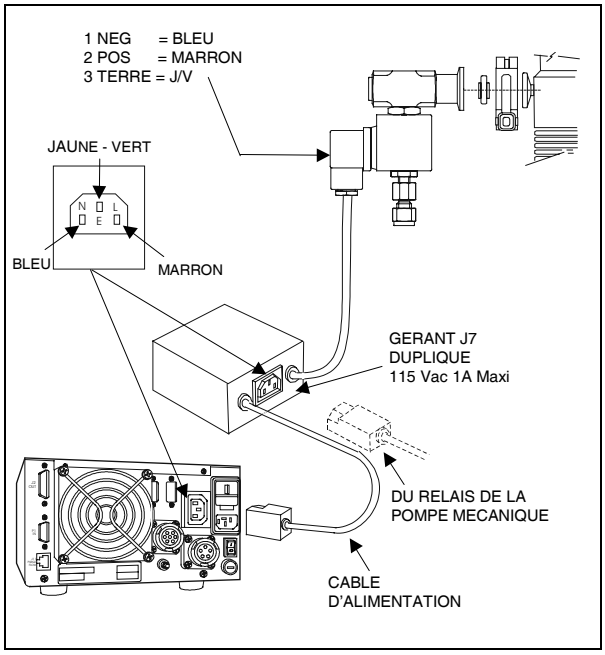

Installation sur pompe avec bouchon à vis

Après avoir achevé l'installation mécanique, brancher le câble d'alimentation du système de commande du kit "Heavy Duty Vent Valve" à son connecteur sur le panneau arrière du gérant du Turbo pump controller.

ATTENTION

Avant d'alimenter le kit, vérifier que la tension de sortie présente sur le connecteur est de 115 Vac.

MISE AU REBUT

Signification du logo "WEEE" figurant sur les étiquettes.

Le symbole ci-dessous est appliqué conformément à la directive CE nommée "WEEE".

Ce symbole **(uniquement valide pour les pays de la Communauté européenne)** indique que le produit sur lequel il est appliqué NE doit PAS être mis au rebut avec les ordures ménagères ou les déchets industriels ordinaires, mais passer par un système de collecte sélective.

Après avoir vérifié les termes et conditions du contrat de vente, l'utilisateur final est donc prié de contacter le fournisseur du dispositif, maison mère ou revendeur, pour mettre en œuvre le processus de collecte et mise au rebut.

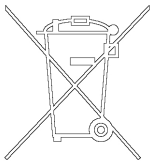

HEAVY DUTY VENT VALVE INSTALLATION PROCEDURE

OVERVIEW

The Kit “Heavy Duty Vent Valve”, consisting of a control unit and a valve, is a complete unit for automatic venting of the Turbo-V vent pump when it is switched off or during a power failure.

The valve is electro-magnetically-actuated and Viton-sealed with an NW16 flange on the high vacuum port. The valve inlet is provided with a Swagelock 1/4” adapter for the connection to the nitrogen line.

The control unit is powered by the Turbo-V controller and is provided with a fixed delay time of about 1 second to avoid undesired venting during a temporary power failure and to allow closure of the system valves before venting.

TECHNICAL CHARACTERISTICS

Control unit

- Input voltage — 120 Vac ± 10%
  - frequency — 50 to 60 Hz
  - current — 0,15 A
- Output voltage — 24 Vdc ± 5%
  - power (max) — 11 W
- Delay time — about 1 sec.
- Operating temperature — 0 to 40 °C
- Storage temperature — -20 to 50 °C

Connection Cables

- Input — 0.5 meter long, 3 wire
- Output to valve — 5 meters long, 3 wire
- Weight (with cable) — 0.5 Kg (1.1 lbs)

Vent Valve

- Valve status — Normally open (closed when power is applied)
- High vacuum connection — NW16
- Air intake — Swagelock 1/4”
- Orifice size — 3 mm
- Pressure range — 10^{-6} mbar to 2 bar (10^{-7} Torr to 2 atm)
- Leak rate — $\leq 5x10^{-8}$ mbar l/s
- Life cycle — one million cycles
- Input voltage — 24 Vdc ±10%
  - power — 11 W
- Bakeout temperature — 60 °C
- Weight (w/o cable) — 0,4 Kg (0,96 lb)

The following figure gives the overall dimensions of the Heavy Duty Vent Valve kit.

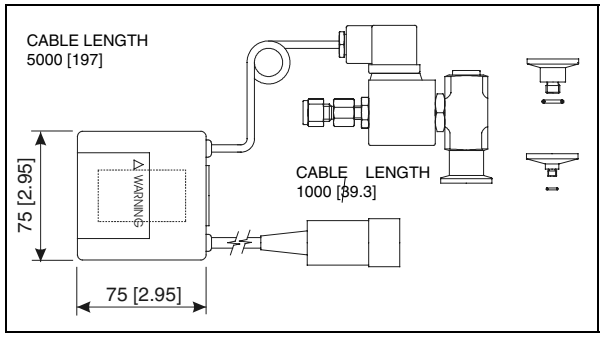

Dimensions in mm [inches]

INSTALLATION

The following figure shows the different components of the Heavy Duty Vent Valve kit. These will be supplied to the client disassembled.

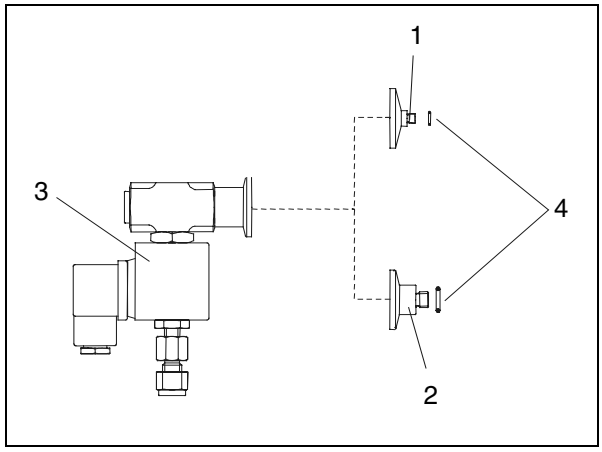

Heavy Duty Vent Valve Kit

1. NW16 - M5 Flange
2. NW16 - M5 Flange
3. Valve
4. O-ring

The kit contains two NW16 M8 or M5 adapters. It is up to the client to decide which adapter to use.

WARNING

When assembling the kit, be careful not to unscrew the coil securing ring and nut inside the valve.

Once the kit is assembled, install it on the pump.

The following figure shows a tipical installation on a pump.

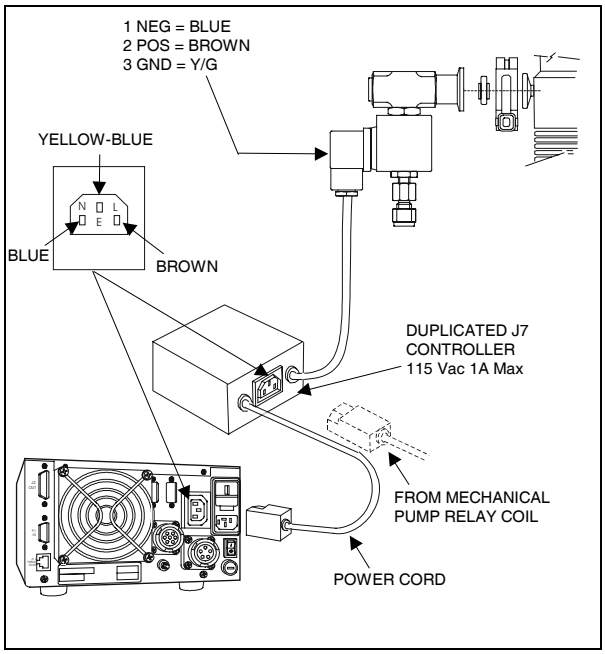

Installation on a Pump Equipped with a Screw Cap

Upon completion of the mechanical installation, attach the Heavy Duty Vent Valve controller unit power cord to the related connector on the rear panel of the Turbo pump controller.

WARNING

Before powering on the kit, be sure that the output voltage on the connector is 115 Vac.

DISPOSAL

Meaning of the "WEEE" logo found in labels
The following symbol is applied in accordance with the EC WEEE (Waste Electrical and Electronic Equipment) Directive.
This symbol (**valid only in countries of the European Community**) indicates that the product it applies to must NOT be disposed of together with ordinary domestic or industrial waste but must be sent to a differentiated waste collection system.
The end user is therefore invited to contact the supplier of the device, whether the Parent Company or a retailer, to initiate the collection and disposal process after checking the contractual terms and conditions of sale.

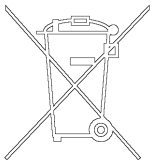

VARIAN

Request for Return

ISO 9001 REGISTERED

1. A Return Authorization Number (RA#) **WILL NOT** be issued until this Request for Return is completely filled out, signed and returned to Varian Customer Service.
2. Return shipments shall be made in compliance with local and international **Shipping Regulations** (IATA, DOT, UN).
3. The customer is expected to take the following actions to ensure the **Safety** of workers at Varian: (a) Drain any oils or other liquids, (b) Purge or flush all gasses, (c) Wipe off any excess residues in or on the equipment, (d) Package the equipment to prevent shipping damage, (for Advance Exchanges please use packing material from replacement unit).
4. Make sure the shipping documents clearly show the RA# and then return the package to the Varian location nearest you.

North and South America
Varian Vacuum Technologies
121 Hartwell Ave
Lexington, MA 02421
Phone : +1 781 8617200
Fax: +1 781 8609252

Europe and Middle East
Varian SpA
Via Flli Varian 54
10040 Leini (TO) – ITALY
Phone: +39 011 9979111
Fax: +39 011 9979330

Asia and ROW
Varian Vacuum Technologies
Local Office

CUSTOMER INFORMATION

Company name: ……

Contact person: Name: …… Tel: ……

Fax: …… E-Mail: ……

Ship Method: …… Shipping Collect #: …… P.O.#: ……

Europe only: VAT reg. Number: …… *USA only*: ☐ Taxable ☐ Non-taxable

Customer Ship To: …… Customer Bill To: ……

……

……

……

……

PRODUCT IDENTIFICATION

Product Description	Varian P/N	Varian S/N	Purchase Reference

TYPE OF RETURN *(check appropriate box)*

☐ Paid Exchange ☐ Paid Repair ☐ Warranty Exchange ☐ Warranty Repair ☐ Loaner Return
☐ Credit ☐ Shipping Error ☐ Evaluation Return ☐ Calibration ☐ Other ……

HEALTH and SAFETY CERTIFICATION

Varian Vacuum Technologies **CAN NOT ACCEPT** any equipment which contains **BIOLOGICAL HAZARDS** or **RADIOACTIVITY**. Call Varian Customer Service to discuss alternatives if this requirement presents a problem.

The equipment listed above (check one):

☐ **HAS NOT** been exposed to any toxic or hazardous materials

OR

☐ **HAS** been exposed to any toxic or hazardous materials. In case of this selection, check boxes for any materials that equipment was exposed to, check all categories that apply:

☐ Toxic ☐ Corrosive ☐ Reactive ☐ Flammable ☐ Explosive ☐ Biological ☐ Radioactive

List all toxic or hazardous materials. Include product name, chemical name and chemical symbol or formula.

……

Print Name: …… Customer Authorized Signature: ……

Print Title: …… Date: ……/……/……

NOTE: If a product is received at Varian which is contaminated with a toxic or hazardous material that was not disclosed, **the customer will be held responsible** for all costs incurred to ensure the safe handling of the product, and **is liable** for any harm or injury to Varian employees as well as to any third party occurring as a result of exposure to toxic or hazardous materials present in the product.

Do not write below this line

Notification (RA)#: …… Customer ID#: …… Equipment #: ……

VARIAN

Request for Return

ISO 9001 REGISTERED

FAILURE REPORT

TURBO PUMPS and TURBOCONTROLLERS

		POSITION	PARAMETERS	
☐ Does not start	☐ Noise	☐ Vertical	Power:	Rotational Speed:
☐ Does not spin freely	☐ Vibrations	☐ Horizontal	Current:	Inlet Pressure:
☐ Does not reach full speed	☐ Leak	☐ Upside-down	Temp 1:	Foreline Pressure:
☐ Mechanical Contact	☐ Overtemperature	☐ Other:	Temp 2:	Purge flow:
☐ Cooling defective		……	OPERATION TIME:	

TURBOCONTROLLER ERROR MESSAGE:

ION PUMPS/CONTROLLERS

☐ Bad feedthrough	☐ Poor vacuum
☐ Vacuum leak	☐ High voltage problem
☐ Error code on display	☐ Other

Customer application:

VALVES/COMPONENTS

☐ Main seal leak	☐ Bellows leak
☐ Solenoid failure	☐ Damaged flange
☐ Damaged sealing area	☐ Other

Customer application:

LEAK DETECTORS

☐ Cannot calibrate	☐ No zero/high backround
☐ Vacuum system unstable	☐ Cannot reach test mode
☐ Failed to start	☐ Other

Customer application:

INSTRUMENTS

☐ Gauge tube not working	☐ Display problem
☐ Communication failure	☐ Degas not working
☐ Error code on display	☐ Other

Customer application:

PRIMARY PUMPS

☐ Pump doesn't start	☐ Noisy pump (describe)
☐ Doesn't reach vacuum	☐ Over temperature
☐ Pump seized	☐ Other

Customer application:

DIFFUSION PUMPS

☐ Heater failure	☐ Electrical problem
☐ Doesn't reach vacuum	☐ Cooling coil damage
☐ Vacuum leak	☐ Other

Customer application:

FAILURE DESCRIPTION

(Please describe in detail the nature of the malfunction to assist us in performing failure analysis):

NOTA: Su richiesta questo documento è disponibile anche in Tedesco, Italiano e Francese.
REMARQUE : Sur demande ce document est également disponible en allemand, italien et français.
HINWEIS: Auf Aufrage ist diese Unterlage auch auf Deutsch, Italienisch und Französisch erhältlich.

Sales and Service Offices

France and Benelux
Varian s.a.
7 Avenue des Tropiques
Z.A. de Courtaboeuf - B.P. 12
Les Ulis cedex (Orsay) 91941
France
Tel: (33) 1 69 86 38 84
Fax: (33) 1 69 86 29 88
From Benelux Tel: (31) 118 67 15 70
From Benelux Fax: (31) 118 67 15 69

Canada
Central coordination through:
Varian Vacuum Technologies
121 Hartwell Avenue
Lexington, MA 02421
USA
Tel: (781) 861 7200
Fax: (781) 860 5437
Toll Free # 1 (800) 882 7426

China
Varian Technologies - Beijing
Rm 1648 Central Tower South Wing
Beijing Junefield Plaza
No. 10 XuanWuMenWai Street
Beijing 100052
P.R. China
Tel: (86) 10 63108550
Fax: (86) 10 63100141
Toll Free: 800 820 6556

Germany and Austria
Varian Deutschland GmbH
Alsfelder Strasse 6
Postfach 11 14 35
64289 Darmstadt
Germany
Tel: (49) 6151 703 353
Fax: (49) 6151 703 302

India
Varian India PVT LTD
101-108, 1st Floor
1010 Competent House
7, Nangal Raya Business Centre
New Delhi 110 046
India
Tel: (91) 11 28521171
Fax: (91) 11 28521173

Italy
Varian Inc.
Vacuum Technologies
Via F.lli Varian 54
10040 Leini, (Torino)
Italy
Tel: (39) 011 997 9 111
Fax: (39) 011 997 9 350

Japan
Varian Vacuum Technologies
Sumitomo Shibaura Building, 8th Floor
4-16-36 Shibaura
Minato-ku, Tokyo 108
Japan
Tel: (81) 3 5232 1253
Fax: (81) 3 5232 1263
Toll Free: 0120 655 040

Korea
Varian Technologies Korea, Ltd
Shinsa 2nd Bldg. 2F
966-5 Daechi-dong
Kangnam-gu, Seoul
Korea 135-280
Tel: (82) 2 3452 2452
Fax: (82) 2 3452 2451
Toll Free: 080 222 2452

Mexico
Varian, S. de R.L. de C.V.
Concepcion Beistegui No 109
Col Del Valle
C.P. 03100
Mexico, D.F.
Tel: (52) 5 523 9465
Fax: (52) 5 523 9472

Taiwan
Varian Technologies Asia Ltd.
14F-6, No.77, Hsin Tai Wu Rd., Sec. 1
Hsi chih, Taipei Hsien
Taiwan, R.O.C.
Tel: (886) 2 2698 9555
Fax: (886) 2 2698 9678
Toll Free: 0800 051342

UK and Ireland
Varian Ltd.
6 Mead Road
Oxford Industrial Park - Yarnton
Oxford OX5 1QU - England
Tel: (44) 1865 291570
Fax: (44) 1865 291571

United States
Varian Vacuum Technologies
121 Hartwell Avenue
Lexington, MA 02421
USA
Tel: (781) 861 7200
Fax: (781) 860 5437

Other Countries
Varian Inc.
Vacuum Technologies
Via F.lli Varian 54
10040 Leini, (Torino)
Italy
Tel: (39) 011 997 9 111
Fax: (39) 011 997 9 350

Customer Support & Service:

North America
Toll-Free: 1 800 882 7426
vtl.technical.support@varianinc.com

Europe
Tel: 00 800 234 234 00
vtt.technical.support@varianinc.com

China
Toll-Free: 800 820 8266
vtc.technical.support@varianinc.com

Japan
Toll-Free: 0120 655 040
vtj.technical.support@varianinc.com

Korea
Toll-Free: 080 222 2452
vtk.technical.support@varianinc.com

Taiwan
Toll-Free: 0 800 051 342
vtw.technical.support@varianinc.com

Worldwide Web Site, Catalog and Order On-line:
www.varianinc.com

Representative in most countries

VARIAN

03/06