VARIAN

vacuum technologies

Controller Navigator for TV70

Model SQ 344

MANUALE DI ISTRUZIONI

NOTICE DE MODE D'EMPLOI

INSTRUCTION MANUAL

87-900-954-01 (B)
APRIL 2002

Controller Navigator for TV70

VARIAN

vacuum technologies

Dear Customer,

Thank you for purchasing a VARIAN vacuum product. At VARIAN Vacuum Technologies we make every effort to ensure that you will be satisfied with the product and/or service you have purchased.

As part of our Continuous Improvement effort, we ask that you report to us any problem you may have had with the purchase or operation of our product. On the back side you find a Corrective Action Request form that you may fill out in the first part and return to us.

This form is intended to supplement normal lines of communications and to resolve problems that existing systems are not addressing in an adequate or timely manner.

Upon receipt of your Corrective Action Request we will determine the Root Cause of the problem and take the necessary actions to eliminate it. You will be contacted by one of our employees who will review the problem with you and update you, with the second part of the same form, on our actions.

Your business is very important to us. Please, take the time and let us know how we can improve.

Sincerely,

Sergio PIRAS

Vice President and General Manager
VARIAN Vacuum Technologies

Note: Fax or mail the Customer Request for Action (see backside page) to VARIAN Vacuum Technologies (Torino) - Quality Assurance or to your nearest VARIAN representative for onward transmission to the same address.

CUSTOMER REQUEST FOR CORRECTIVE / PREVENTIVE / IMPROVEMENT ACTION

TO : VARIAN VACUUM TECHNOLOGIES TORINO - QUALITY ASSURANCE

FAX N° : XXXX - 011 - 9979350

ADDRESS: VARIAN S.p.A. - Via F.lli Varian, 54 - 10040 Leinì (Torino) - Italy

E-MAIL : marco.marzio@varianinc.com

NAME	COMPANY	FUNCTION
_____	_____	_____

ADDRESS : _____

TEL. N° : _____ FAX N° : _____

E-MAIL : _____

PROBLEM / SUGGESTION :

_____

REFERENCE INFORMATION (model n°, serial n°, ordering information, time to failure after installation, etc.) :

_____

DATE _____

CORRECTIVE ACTION PLAN / ACTUATION LOG N° _____
(by VARIAN VTT)

_____

XXXX = Code for dialing Italy from your country (es. 01139 from USA; 00139 from Japan, etc.)

VARIAN

INFORMAZIONI GENERALI 1

INDICATIONS GENERALES 2

GENERAL INFORMATION 3

TECHNICAL INFORMATION 4

DESCRIPTION OF THE SQ 344 4

SQ 344 OUTLINE 4

INTERCONNECTIONS 6

P3 - Vent 6

P4 – External fan 6

J5 - IN-OUT 6

P2 - Serial 8

RS 232/RS 485 COMMUNICATION DESCRIPTION 8

Communication Format 8

Communication Protocol 8

Window Meanings 10

SQ 344 CONTROLLER INSTALLATION 11

ELECTRICAL CONNECTION 11

USE IN PRESENCE OF MAGNETIC FIELDS 11

ACCESSORIES AND SPARE PARTS 11

INFORMAZIONI GENERALI

Questa apparecchiatura è destinata ad uso professionale. L'utilizzatore deve leggere attentamente il presente manuale di istruzioni ed ogni altra informazione addizionale fornita dalla Varian prima dell'utilizzo dell'apparecchiatura. La Varian si ritiene sollevata da eventuali responsabilità dovute all'inosservanza totale o parziale delle istruzioni, ad uso improprio da parte di personale non addestrato, ad interventi non autorizzati o ad uso contrario alle normative nazionali specifiche.
Il controller SQ 344 è un controller. Ha dei connettori ausiliari tramite i quali è possibile alimentare un ventilatore aggiuntivo, comandare la valvola di vent, pilotarlo da remoto tramite un computer host collegato con linea seriale (RS232 o RS485).
Nei paragrafi seguenti sono riportate tutte le informazioni necessarie a garantire la sicurezza dell'operatore durante l'utilizzo dell'apparecchiatura. Informazioni dettagliate sono fornite nell'appendice “Technical information”.
Questo manuale utilizza le seguenti convenzioni:

PERICOLO!

I messaggi di pericolo attirano l'attenzione dell'operatore su una procedura o una pratica specifica che, se non eseguita in modo corretto, potrebbe provocare gravi lesioni personali.

ATTENZIONE!

I messaggi di attenzione sono visualizzati prima di procedure che, se non osservate, potrebbero causare danni all'apparecchiatura.

NOTA

Le note contengono informazioni importanti estrapolate dal testo.

IMMAGAZZINAMENTO

Durante il trasporto e l'immagazzinamento del SQ 344 Navigator non devono essere superate le seguenti condizioni ambientali:
- temperatura: da -20 °C a +70 °C
- umidità relativa: 0 - 95% (non condensante)

PREPARAZIONE PER L'INSTALLAZIONE

Il SQ 344 viene fornito in un imballo protettivo speciale; se si presentano segni di danni, che potrebbero essersi verificati durante il trasporto, contattare l'ufficio vendite locale. Non disperdere l'imballo nell'ambiente. Il materiale è completamente riciclabile e risponde alla direttiva CEE 85/399 per la tutela dell'ambiente.

INSTALLAZIONE

Non installare e/o utilizzare il controller in ambienti esposti ad agenti atmosferici (pioggia, gelo, neve), polveri, gas aggressivi, in ambienti esplosivi o con elevato rischio di incendio.
Durante il funzionamento è necessario che siano rispettate le seguenti condizioni ambientali:
- pressione massima: 2 bar oltre la pressione atmosferica
- temperatura: da + 5 °C a +35 °C
- umidità relativa: 0 - 95% (non condensante).

ATTENZIONE!

Il SQ 344 appartiene alla seconda categoria di installazione (o sovratensione) prevista dalla normativa EN 61010-1. Connettere quindi il dispositivo ad una linea di alimentazione che soddisfi tale categoria.
Il SQ 344 ha dei connettori per gli ingressi/uscite e per la comunicazione seriale che devono essere connessi ai circuiti esterni in modo che nessuna parte sotto tensione sia accessibile. Assicurarsi che l’isolamento del dispositivo connesso al SQ 344 abbia un isolamento adeguato anche in condizione di guasto singolo come previsto dalla normativa EN 61010-1.

Per l'installazione degli accessori opzionali, vedere "Technical Information".

USO

In questo paragrafo sono riportate le principali procedure operative.
Prima di usare il controller effettuare tutti i collegamenti elettrici.

Accensione ed Uso del SQ 344

Per accendere il SQ 344 è sufficiente fornire la tensione di alimentazione. Il controller riconosce automaticamente la presenza dei segnali di interlock e di avvio ed avvia la pompa.
La prima partenza della pompa avviene nel modo “Soft Start” che, al termine del ciclo di avvio, si disabilita automaticamente, per cui tutti i successivi avvii della pompa avvengono senza il modo “Soft Start”. Per riavere una partenza con “Soft Start” attivo occorre riabilitare il modo suddetto tramite software (vedere il paragrafo “RS 232/485 COMMUNICATION DESCRIPTION” nell’appendice “Technical Information”).
Il LED verde posto sul pannello della base del SQ 344 indica, con la frequenza del suo lampeggio, le condizioni operative del sistema:
- acceso fisso: la pompa è in rotazione normale;
- lampeggiante lentamente (periodo di circa 400 ms): il sistema è in stato di rampa, o di frenata, o di Stop, o di “Waiting for interlock”;
- lampeggiante velocemente (periodo di circa 200 ms): condizione di errore.

Arresto del SQ 344

Per arrestare il SQ 344 è sufficiente togliere la tensione di alimentazione.

Arresto di Emergenza

Per arrestare in condizioni di emergenza il SQ 344 occorre staccare il cavo di alimentazione.

MANUTENZIONE

Il SQ 344 non richiede alcuna manutenzione. Qualsiasi intervento deve essere eseguito da personale autorizzato.

Prima di effettuare qualsiasi intervento sul sistema scollegarlo dall’alimentazione.

NOTA

Prima di rispedire al costruttore un sistema per riparazioni o advanced exchange service, è indispensabile compilare e far pervenire al locale ufficio vendite la scheda "Sicurezza e Salute" allegata al presente manuale di istruzioni. Copia della stessa deve essere inserita nell'imballo del sistema prima della spedizione.

Qualora un sistema dovesse essere rottamato, procedere alla sua eliminazione nel rispetto delle normative nazionali specifiche.

INDICATIONS GENERALES

Cet appareillage a été conçu en vue d'une utilisation professionnelle. Avant toute utilisation de l'appareil, il est conseillé à l'utilisateur de lire attentivement cette notice d'instructions ainsi que toute autre indication supplémentaire fournie par Varian qui décline par conséquent toute responsabilité en cas de non respect total ou partiel des instructions données, d'utilisation impropre par un personnel non formé, d'opérations non autorisées ou d'emploi contraire aux réglementations nationales spécifiques. Le SQ 344 est un contrôleur. Le SQ 344 est en outre doté de connecteurs auxiliaires permettant d'alimenter un ventilateur supplémentaire, de commander la soupape de ventilation, de le piloter à distance à l'aide d'un ordinateur host connecté par ligne sérielle. Les paragraphes suivants fournissent toutes les indications nécessaires à garantir la sécurité de l'opérateur pendant l'utilisation de l'appareillage. Des renseignements plus détaillés se trouvent dans l'appendice "Technical Information".
Cette notice utilise les signes conventionnels suivants:

DANGER!

Les messages de danger attirent l'attention de l'opérateur sur une procédure ou une manoeuvre spéciale qui, effectuée de façon impropre, risque de provoquer de graves lésions

ATTENTION!

Les messages d'attention apparaissent avant certaines procédures dont le non respect pourrait endommager sérieusement l'appareillage.

NOTE

Les notes contiennent des renseignements importants, extrapolés du texte.

STOCKAGE

Pendant le transport et le stockage du SQ 344, veiller au respect des conditions environnementales suivantes:
- température: de - 20°C - à + 70°C
- humidité relative: 0 - 95 % (non condensante)

PREPARATION POUR L'INSTALLATION

Le SQ 344 est livré dans un emballage de protection spécial; en cas d'endommagement de l'emballage pouvant s'être produit pendant le transport, contacter le bureau de vente local.
Ne pas abandonner l'emballage dans la nature. Le matériel est entièrement recyclable et conforme à la directive CEE 85/399 en matière de protection de l'environnement.

INSTALLATION

Pendant le fonctionnement, il est nécessaire de respecter les conditions environnementales suivantes:
- pression maxi: 2 bar au-delà de la pression atmosphérique
- température: de +5°C° à +40°C
- humidité relative: 0 - 95% (non condensante)

ATTENTION!

Le SQ 344 appartient à la deuxième catégorie d'installations (ou surtension) prévue par la norme EN 61010-1. De ce fait, brancher le dispositif à une ligne d'alimentation compatible avec cette catégorie.
Le SQ 344 dispose de connecteurs pour les entrées/sorties et pour la communication en série qui doivent être branchés aux circuits extérieurs de façon qu'aucune partie sous tension ne soit accessible.
S'assurer que l'isolation du dispositif branché au SQ 344 a une isolation appropriée même en condition de panne individuelle selon les termes de la norme EN 61010-1.

Pour l'installation des accessoires en option, se reporter à "Technical Information".

UTILIZATION

Ce paragraphe présente les principales procédures opérationnelles. Avant d'utiliser le système, effectuer tous les branchements électriques.

Mise en marche et utilisation du TV 301 Navigator

Pour allumer le SQ 344 il suffit de fournir la tension d'alimentation. Le contrôleur reconnaît automatiquement la présence de signaux d'interlock et de démarrage et il actionne la pompe.
La première mise en marche de la pompe se fait en mode "Soft Start". Au terme du cycle de démarrage, ce mode se désactive automatiquement et les mises en marche suivantes se font sans le passage "Soft Start". Pour obtenir à nouveau une mise en marche "Soft Start", il faut réactiver ce mode opératoire à l'aide du logiciel (Cf. paragraphe "RS232 COMMUNICATION DESCRIPTION" dans l'appendice "Technical Information").
La LED verte LD1 placée sur le panneau de la base du SQ 344 indique, par sa fréquence de clignotement, les conditions opérationnelles du système:
- allumée fixe: la pompe est en rotation normale;
- clignote lentement (période d'environ 400 ms): le système est en état de rampe, de freinage, de stop ou d'attente interlock.
- clignote rapidement (pédiode d'environ 200 ms): condition d'erreur.

Arrêt du SQ 344

Pour arrêter le SQ 344, il suffit de retirer la tension d'alimentation. Le contrôleur arrête immédiatement la pompe.

Arrêt d'urgence

Pour arrêter le SQ 344 en conditions d'urgence, il faut débrancher le cordon d'alimentation.

ENTRETIEN

Le SQ 344 n'exige aucun entretien particulier. Toute intervention doit être effectuée par un personnel agréé.

NOTE

Avant de renvoyer une pompe au constructeur pour réparation ou "advanced exchange service", remplir et faire parvenir au bureau Varian de votre région la fiche "Sécurité et Santé" jointe au présent manuel d'instructions. Une copie de cette fiche devra être mise dans l'emballage de la pompe avant l'expédition.

En cas de mise au rebut de la pompe, procéder à son élimination conformément aux réglementations nationales concernant la gestion des déchets.

GENERAL INFORMATION

This equipment is destined for use by professionals. The user should read this instruction manual and any other additional information supplied by Varian before operating the equipment. Varian will not be held responsible for any events occurring due to non-compliance, even partial, with these instructions, improper use by untrained persons, non-authorized interference with the equipment or any action contrary to that provided for by specific national standards.
The following paragraphs contain all the information necessary to guarantee the safety of the operator when using the equipment. Detailed information is supplied in the appendix "Technical Information".
This manual uses the following standard protocol:

WARNING!

The warning messages are for attracting the attention of the operator to a particular procedure or practice which, if not followed correctly, could lead to serious injury.

CAUTION

The caution messages are displayed before procedures which, if not followed, could cause damage to the equipment.

NOTE

The notes contain important information taken from the text.

STORAGE

When transporting and storing the pumps, the following environmental requirements should not be exceeded:
temperature: from -20° to +70 °C
relative humidity: 0 - 95% (non-condensing)

PREPARATION FOR INSTALLATION

NOTE

Normal exposure to the environment cannot damage the SQ-344. Nevertheless, it is advisable to keep it closed until it is installed in the system, thus preventing any form of pollution by dust.

INSTALLATION

Do not install or use the controller in an environment exposed to atmospheric agents (rain, snow, ice), dust, aggressive gases, or in explosive environments or those with a high fire risk. During operation, the following environmental conditions must be respected:

- maximum pressure: 2 bar above atmospheric pressure
- temperature: from +5 °C to +40 °C
- relative humidity: 0 - 95% (non-condensing)

CAUTION

The SQ 344 belongs to the second installation (or overvoltage) category as per directive EN 61010-1. Connect the device to a mains line that satisfy the above category.
The SQ 344 has Input/Output and serial communication connectors that must be connected to external circuits in such a way that no electrical part is accessible.

Be sure that the insulation of the device connected to the SQ 344 is adequate even in the case of single fault as per directive EN 61010-1.

For installation of optional accessories, see "Technical Information".

USE

This paragraph details the fundamental operating procedures. Make all electrical connections before the use of the system.

Switching on and Use of SQ 344

To switch on the SQ 344 it is necessary to supply the mains. The controller automatically recognizes the interlock and start signals presence and start up the pump.
The first pump start up is in “Soft Start” mode. When the start up cycle is finished, the “Soft Start” mode automatically is disabled, and the following start ups are without the “Soft Start” mode. To re-enable the “Soft Start” mode it must be activated by the suitable software command (see the paragraph “RS 232/485 COMMUNICATION DESCRIPTION” in the appendix “Technical Information”).
The green LED located on the SQ 344 base front panel indicates with its flashing frequency the system operating conditions:
with no flashing: the pump is normally rotating;
slowly flashing (period of about 400 ms): the system is in ramp, or in braking, or in Stop, or in “Waiting for interlock” status;
fast flashing (period of about 200 ms): error condition.

SQ 344 Switching off

To switch off the SQ 344 it is necessary to remove the mains. The integrated controller immediately stops the pump.

Emergency Stop

To immediately stop the SQ 344 in an emergency condition it is necessary to remove the supply cable from the main plug.

MAINTENANCE

The SQ 344 does not require any maintenance. Any work performed on the system must be carried out by authorized personnel.

NOTE

Before returning the controller to the constructor for repairs, or replacement with a reconditioned unit, the "Health and Safety" sheet attached to this instruction manual must be filled-in and sent to the local sales office. A copy of the sheet must be inserted in the system package before shipping.

If a controller is to be scrapped, it must be disposed of in accordance with the specific national standards.

DESCRIPTION OF THE SQ 344

The controller is a solid-state frequency converter which is driven by a single chip microcomputer and is composed of two PCBs which include power supply and 3-phase output, analog and input/output section, microprocessor and digital section.

The power supply, together with the 3-phase output, converts the single phase AC mains supply into a 3-phase, low voltage, medium frequency output which is required to power the pump.

The controller can be operated by a remote host computer via the serial connection. A Windows-based software is available (optional).

TECHNICAL SPECIFICATION

Rotational speed	75000 RPM
Start-up time	< 2 minutes
Pwr supply (mains): Input voltage: Input freq.: Max input pwr: Stand-by pwr: Max operating power:	 100 - 240 Vac 50 - 60 Hz 200 VA 10 W 75 W with water or air cooling
Protection fuse	4 A
Protection fuse	8 A
Compliance with:	EN-CENELEC 55011 IEC 1000-4-2 (ex 801-2) IEC 1000-4-3 (ex 801-3) IEC 1000-4-4 (ex 801-4) EN 61010-1 (IEC 1010-1)
Power cable	With European or NEMA plug 3 meters long (optional)
Serial communication (kit)	RS232 cable with a 9-pin D type male connector and a 9-pin D type female connector, and software (optional)
Storage temperature	-20° C to +70° C
Pump Output	54 Vac, three phase, 1250 Hz
Weight kg (lbs): Controller:	 1 (2.2)

NOTE

When the SQ 344 has been stored at a temperature less than 5°C, wait until the controller has reached the above mentioned temperature.

SQ 344 OUTLINE

The following figures show the SQ 344 outlines (dimensions are in inches [mm]).

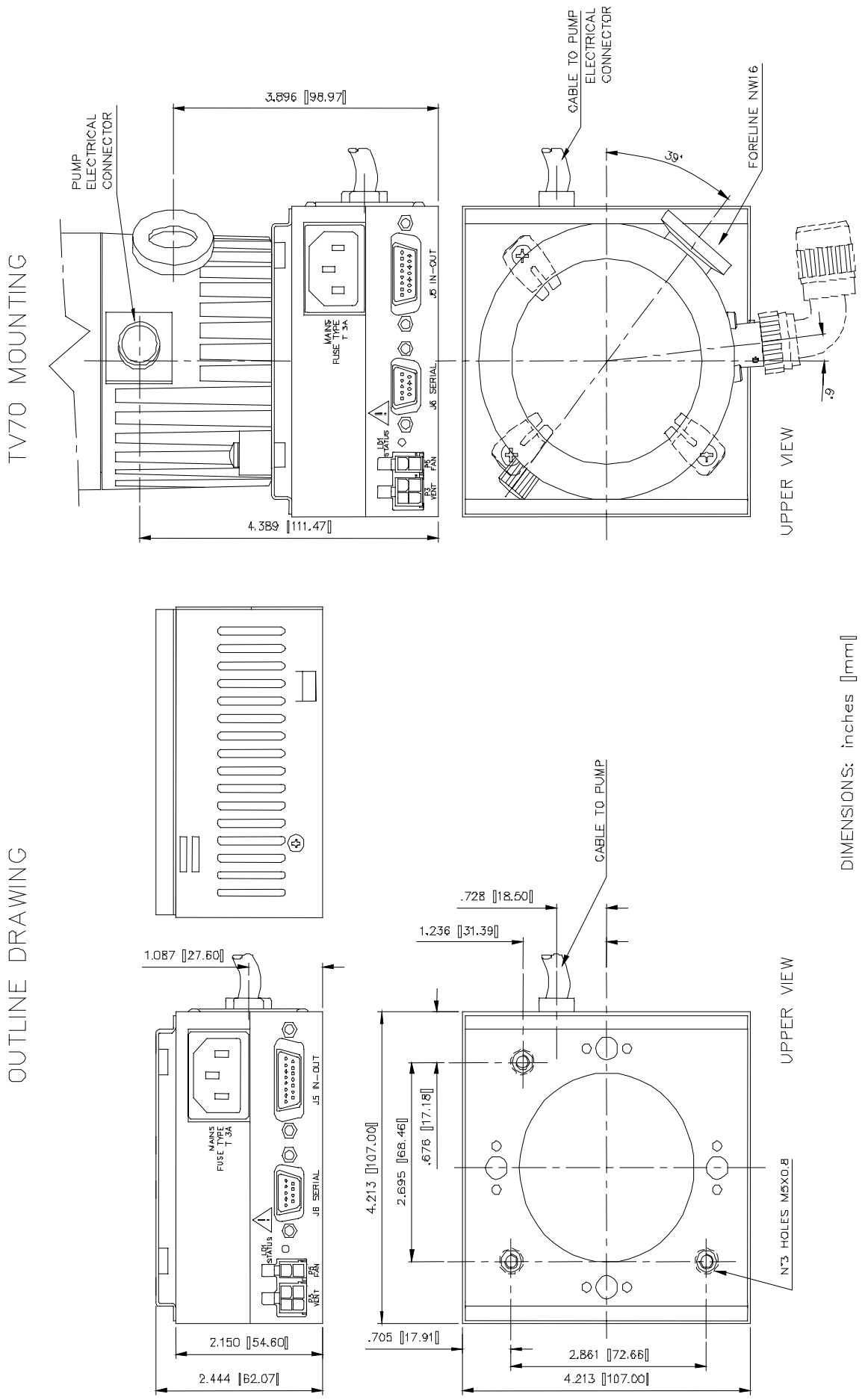
TV70 MOUNTING
PUMP ELECTRICAL CONNECTOR
3.896 [98.97]
4.389 [111.47]
MAINS FUSE TYPE T 3A
J5 IN-OUT
J6 SERIAL
LB1 STATUS
FR FAN
FR VENT
CABLE TO PUMP ELECTRICAL CONNECTOR
FORELINE NW16
39°
.9
UPPER VIEW
OUTLINE DRAWING
1.087 [27.60]
2.150 [54.60]
2.444 [62.07]
CABLE TO PUMP
.728 [18.50]
1.236 [31.39]
4.213 [107.00]
2.695 [68.46]
.676 [17.18]
.705 [17.91]
2.861 [72.66]
4.213 [107.00]
N°3 HOLES M5X0.8
UPPER VIEW
DIMENSIONS: inches [mm]

INTERCONNECTIONS

P3 - Vent

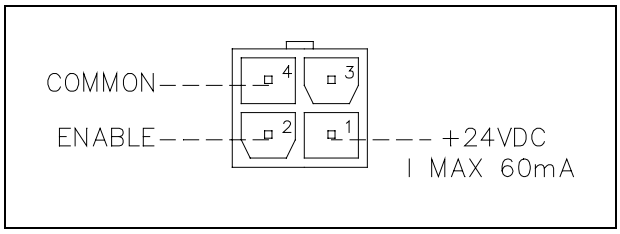

This is a dedicated 24 Vdc connector to control the optional vent valve.

P4 – External fan

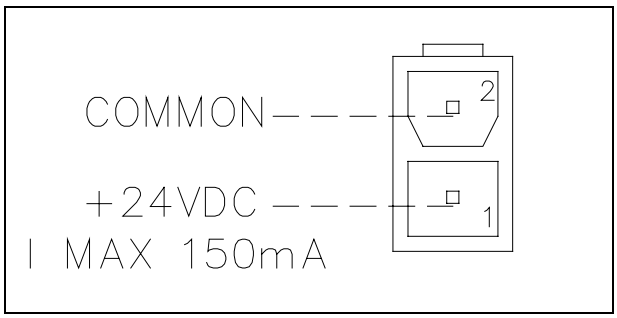

This is a dedicated 24 Vdc connector to supply the optional external fan.

J5 - IN-OUT

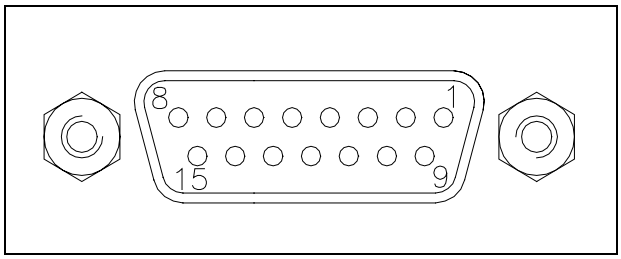

This connector carries all the input and output signals to remote control the SQ 344 .

It is a 15-pins D type connector; the available signals are detailed in the table, the following paragraphs describe the signal characteristics and use.

PIN N.	SIGNAL NAME	INPUT/ OUTPUT
1	START/STOP (+)	IN
2	START/STOP (-)	IN
3	INTERLOCK (+)	IN
4	INTERLOCK (-)	IN
5	SPEED SETTING (+)	IN
6	SPEED SETTING (-)	IN
7	SOFT START (+)	IN
8	SOFT START (-)	IN
9	+24 Vdc	OUT
10	SPARE	
11	PROGRAMMABLE SET POINT	OUT
12	SPARE	
13	FAULT OUTPUT	OUT
14	PROGRAMMABLE ANALOG SIGNAL (+)	OUT
15	• GROUND • PROGRAMMABLE ANALOG SIGNAL (-)	OUT

Signal description

START/STOP: input signal to start or stop the pump. With the supplied cover connector the START/STOP (+) signal is connected to the +24 Vdc pin and the START/STOP (-) signal to the GROUND pin: in this condition the pump automatically starts as soon as the controller recognises the input supply ("Plug & Pump").

INTERLOCK: input signal to control the pump rotation. With the supplied cover connector the INTERLOCK (+) signal is connected to the +24 Vdc pin and the INTERLOCK (-)signal to the GROUND pin.

SPEED SETTING: PWM input signal to set the pump speed. The PWM signal characteristics must be the following:

- frequency: 100 Hz +/-20%
- ampitude: 0 - 24 V max
- duty cycle range: from 25% to 75% corresponding to a pump speed from 250 Hz (25%) to 1250 Hz (75%) linearly.

PROGRAMMABLE ANALOG SIGNAL: this output signal is a voltage (from 0 to 10 Vdc) linearly proportional to a reference quantity (frequency or power) set by the user (0V = 0W or 0Hz; 10V = 100W or 1250Hz). The default setting is the frequency.

FAULT: this open collector output signal is closed when a controller fault condition is detected.

PROGRAMMABLE SET POINT: this open collector output signal is enabled when the reference quantity chosen (frequency, current or time) is higher than the set threshold. The signal can be "high level active" (that is the output is normally at 0 Vdc and becomes 24 Vdc when activated), or "low level active" (that is the output is normally at 24 Vdc and becomes 0 Vdc when activated). Moreover, if the reference quantity is the frequency or the current, it is possible to set the hysteresis (in % of the threshold value) to avoid bouncing.

For example:

- reference quantity: frequency
- threshold: 500 Hz
- hysteresis: 1%
- activation type: "high level"

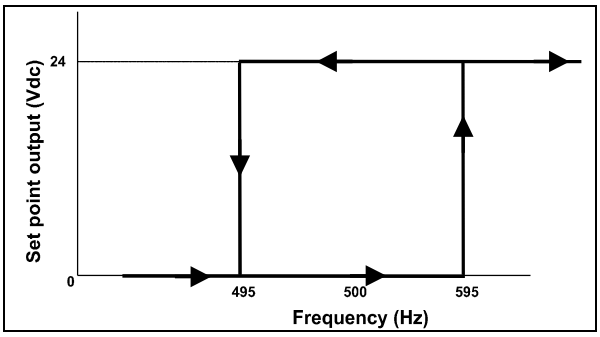

The set point output stays at 0 Vdc until the frequency becomes higher than 505 Hz (that is 500 Hz + 1% of 500 Hz), then the output goes at 24 Vdc and stays at 24 Vdc until the frequency becomes lower than 495 Hz (that is 500 Hz – 1% of 500 Hz).
It is possible to delay the set point checking for a programmable delay time.
The PROGRAMMABLE SET POINT signal has the following default settings:
- reference quantity: frequency
- thereshold: 1125 Hz
- hysteresis: 2%
- activation type: high level
- delay time: 0 second

NOTE

The Software (optional) allows the operator to set all the programmable feature.

When no external input-output device is available this connector must be closed with the supplied mating connector that short-circuits the START and INTERLOCK inputs with the GROUND input.

How to connect the open collector input of the controller

Here below there are the typical connections of the open collector input of SQ 344 to an external controller. Two cases are considered:

1. the customer supplies the 24 Vdc

2. the customer does not supply the 24 Vdc.

Please note that on the connector a 24 Vdc, 60 mA voltage, a GROUND signal and the open collector pin are available.

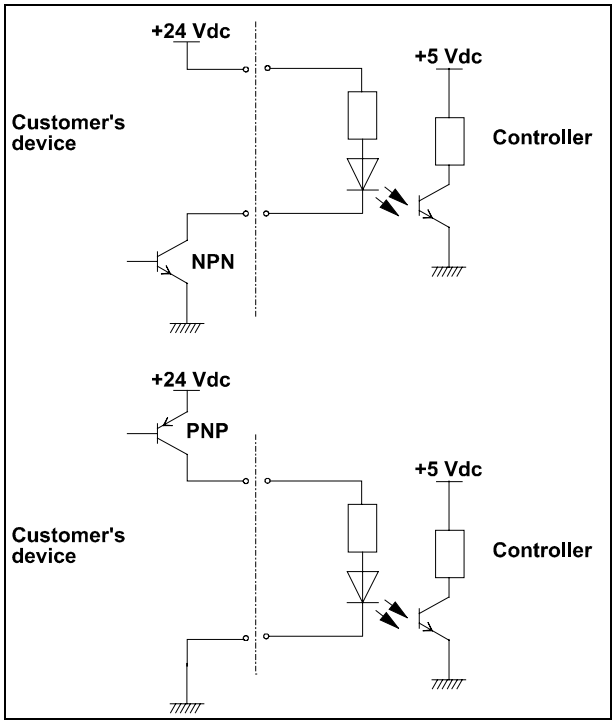

Case 1

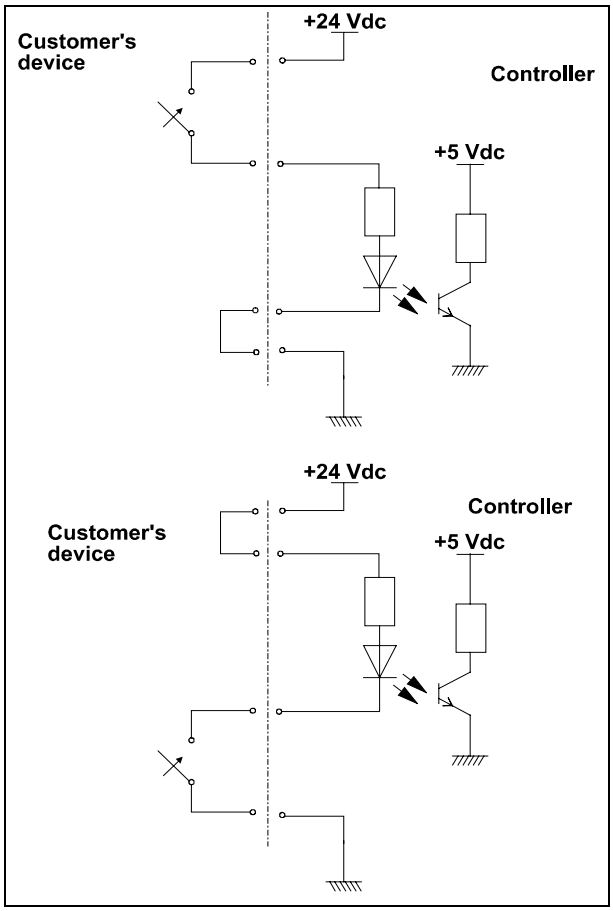

Case 2 with relay utilisation

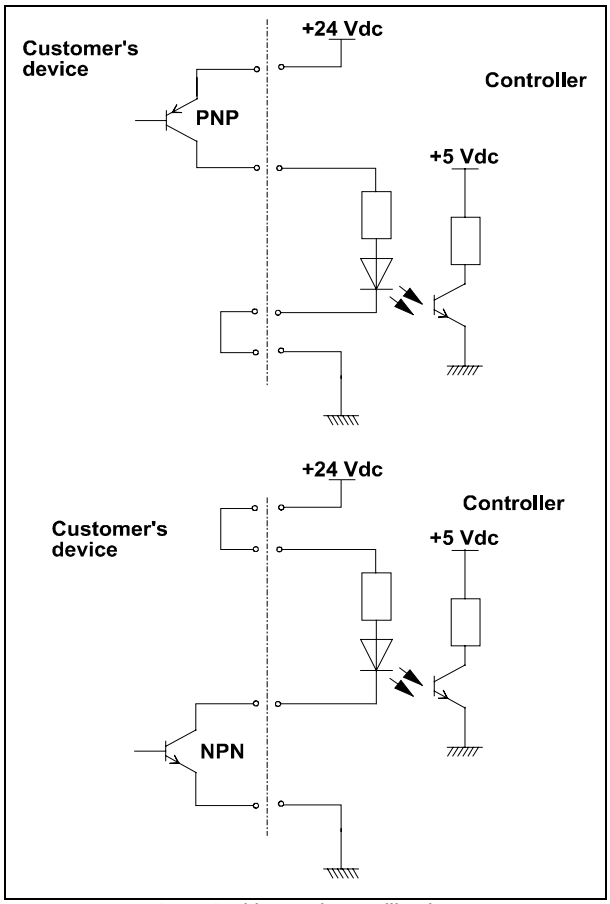

Case 2 with transistor utilisation

How to connect the outputs of the controller

The following figure shows a typical logic output connection (relay coil) but any other device may be connected e.g. a LED, a computer, etc., and the related simplified circuit of the controller. The figure example refers to the programmable set point signal on pins 11 and 9.

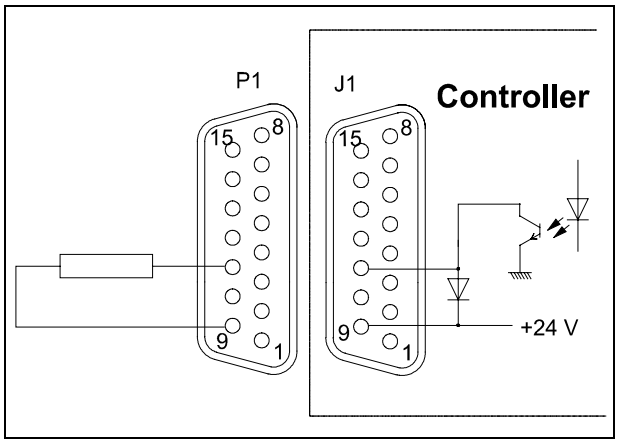

Typical output connection

P2 - Serial

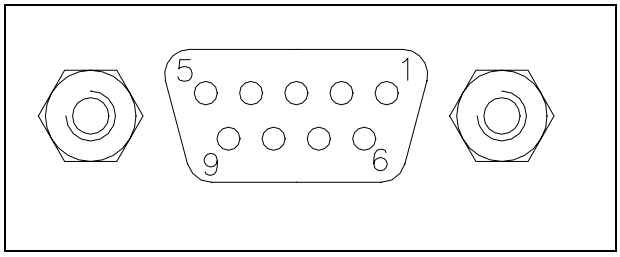

This is a 9 pin D-type serial input/output connector to control via an RS 232 or RS 485 connection the SQ 344.

PIN N.	SIGNAL NAME
1	+5 V (OUT)
2	TX (RS232)
3	RX (RS232)
4	A+ (RS422 Optional)
5	GND
6	A + (RS485)
7	B - (RS422 Optional)
8	B - (RS485)
9	RESERVED

Note that the vent valve can also be controlled by means of the serial connection.

A serial communication kit with a serial cable and the Navigation software is available (optional).

RS 232/RS 485 COMMUNICATION DESCRIPTION

Both the RS 232 and the RS 485 interfaces are available on the connector P2. The communication protocol is the same (see the structure below), but only the RS 485 manages the address field. Therefore to enable the RS 485 is necessary to select the type of communication as well as the device address by means of the software.

Communication Format

- 8 data bit
- no parity
- 1 stop bit
- baud rate: 600/1200/2400/4800/9600 programmable

Communication Protocol

The communication protocol is a MASTER/SLAVE type where:

- Host = MASTER
- Controller = SLAVE

The communication is performed in the following way:

1. the host (MASTER) send a `MESSAGE + CRC` to the controller (SLAVE);
2. the controller answer with an `ANSWER + CRC` to the host.

The `MESSAGE` is a string with the following format:

`<STX>+<ADDR>+<WIN>+<COM>+<DATA>+<ETX>+<CRC>`

where:

NOTE

When a data is indicated between two quotes ('...') it means that the indicated data is the corresponding ASCII character.

- <STX> (Start of transmission) = 0x02
- <ADDR> (Unit address) = 0x80 (for RS 232) <ADDR> (Unit address) = 0x80 + device number (0 to 31) (for RS 485)
- <WIN> (Window) = a string of 3 numeric character indicating the window number (from '000' to '999'); for the meaning of each window see the relevant paragraph.
- <COM> (Command) = 0x30 to read the window, 0x31 to write into the window
- <DATA> = an alphanumeric ASCII string with the data to be written into the window. In case of a reading command this field is not present. The field length is variable according to the data type as per the following table:

DATA TYPE	FIELD LENGTH	VALID CHARACTERS
Logic (L)	1	'0' = OFF '1' = ON
Numeric (N)	6	'-', '.', '0' . . . '9' right justified with '0'
Alphanumeric (A)	10	from blank to '_' (ASCII)

- <ETX> (End of transmission) = 0x03
- <CRC> = XOR of all characters subsequent to <STX> and including the <ETX> terminator. The value is hexadecimal coded and indicated by two ASCII character.

The addressed SLAVE will respond with an ANSWER whose structure depends from the MESSAGE type.

When the MESSAGE is a reading command, the SLAVE will respond transmitting a string with the same structure of the MESSAGE.

NOTE

Using the RS 485 interface, the message structure remains identical to the one used for the RS 232 interface, the only difference being that the value assigned to the ADDRESS <ADDR>

Examples:

Command: START

Source: PC
Destination: Controller

02	80	30	30	30	31	31	03	42	33
STX	ADDR	WINDOW			WR	ON	ETX	CRC	

Source: Controller
Destination: PC

02	80	06	03	38	35
STX	ADDR	ACK	ETX	CRC	

Command: STOP

Source: PC
Destination: Controller

02	80	30	30	30	31	30	03	42	32
STX	ADDR	WINDOW			WR	OFF	ETX	CRC	

Source: Controller
Destination: PC

02	80	06	03	38	35
STX	ADDR	ACK	ETX	CRC	

Command: SOFT-START (ON)

Source: PC
Destination: Controller

02	80	31	30	30	31	31	03	42	32
STX	ADDR	WINDOW			WR	ON	ETX	CRC	

Source: Controller
Destination: PC

02	80	06	03	38	35
STX	ADDR	ACK	ETX	CRC	

Command: SOFT-START (OFF)

Source: PC
Destination: Controller

02	80	31	30	30	31	30	03	42	33
STX	ADDR	WINDOW			WR	OFF	ETX	CRC	

Source: Controller
Destination: PC

02	80	06	03	38	35
STX	ADDR	ACK	ETX	CRC	

Window Meanings

N.	Read/ Write	Data Type	Description	Admitted Values
000	R/W	L	Start/Stop (in remote mode the window is a read only)	Start = 1 Stop = 0
008	R/W	L	Remote (default) or Serial configuration	Remote = 1 Serial = 0 (default = 1)
100	R/W	L	Soft Start (write only in Stop condition)	YES = 1 NO = 0 (default = 1 the first time and 0 the following)
101	R/W	N	Set Point type	0 = Frequency 1 = Current 2 = Time (default = 0)
102	R/W	N	Set Point threshold (expressed in Hz, mA or s)	(default = 1125)
103	R/W	N	Set Point delay: time between the pump start and the set point check (seconds)	0 to 99999 (default = 0)
104	R/W	L	Set Point signal activation type: the signal can be "high level active" or "low level active"	0 = high level active 1 = low level active (default = 0)
105	R/W	N	Set point hysteresis (in % of threshold)	0 to 100 (default = 2)
106	R/W	L	Water cooling	0 = NO 1 = YES
107	R/W	L	Active Stop (write only in stop)	0 = NO 1 = YES
108	R/W	N	Baud rate	600 = 0 1200 = 1 2400 = 2 4800 = 3 9600 = 4 (default = 4)
109	W	L	Pump life/ cycle time/ cycle number reset	To reset write ‘1’
110	R/W	L	Interlock type (default = 1)	Impulse = 0 Continuous = 1
111	R/W	L	Analog output type: output voltage signal proportional to frequency or power	0 = frequency 1 = power (default = 0)
120	R/W	N	Rotational frequency setting (Hz)	250 to 1250 (default = 1250)
121	R/W	N	Maximum rotational frequency in Hz (active only in Stop condition)	250 to 1250 (default = 963)
122	R/W	L	Set vent valve on/off (on = closed)	On = 1 Off = 0 (default = 1)
123 124	Reserved to Varian service			
125	R/W	L	Set the vent valve operation	Automatic = 0 (see note 1.) On command = 1 (see note 2.)
126	R/W	N	Vent valve opening delay (expressed in 0.2 sec)	0 to 65535 (corresponding to 0 to 13107 sec)
130	Reserved to Varian service			
200	R	N	Pump current in mA dc	
201	R	N	Pump voltage in Vdc	
202	R	N	Pump power in W (pump current x pump voltage duty cycle)	
203	R	N	Driving frequency in Hz	
204	R	N	Pump temperature in °C	0 to 70
205	R	N	Pump status	Stop = 0 Waiting intlk = 1 Starting = 2 Auto-tuning = 3 Braking = 4 Normal = 5 Fail = 6
206	R	N	Error code	Bit description: see the following figure
210	R (see note 3.)	N	Actual rotation speed in Hz	250 to 1250

N.	Read/ Write	Data Type	Description	Admitted Values
300	R	N	Cycle time in minutes (zeroed by the reset command)	0 to $4x10^9$
301	R	N	Cycle number (zeroed by the reset command)	0 to $4x10^9$
302	R	N	Pump life in hours (zeroed by the reset command)	0 to $4x10^9$
320 to 399	Reserved to Varian service			
400	R	A	CRC EPROM (QE)	QE8XXXX (where “XXXX” are variable)
402	R	A	CRC Param. (PA)	PA8XXXX (where “XXXX” are variable)
404	R	A	CRC Parameter structure	"XXXX"
500	Reserved to Varian service			
503	R/W	N	RS 485 address	0 to 31 (default = 0)
504	R/W	L	Serial type select	0 = RS 232 1 = RS 485 (default = 0)

NOTES

1. *Automatic means that when the controller stops, the vent valve is opened with a delay defined by window n. 126; when the controller starts, the vent valve is immediately closed.*
2. *On command means that the vent valve is opened or closed by means of window n. 122.*
3. *These commands remove the pump motor supply for a short time. If they are used continuously, they can cause the pump stopping.*

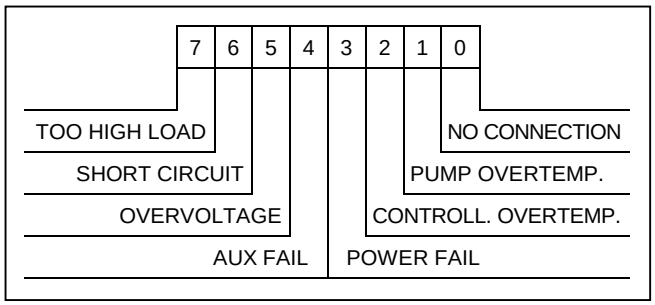

Window N. 206 Bit Description

SQ 344 CONTROLLER INSTALLATION

The controller can be mounted in two position:

– bottom mounting

– side mounting.

To install the controller execute please refer to the outline drowings.

NOTE

The L-shaped bracket is available as an option.

ELECTRICAL CONNECTION

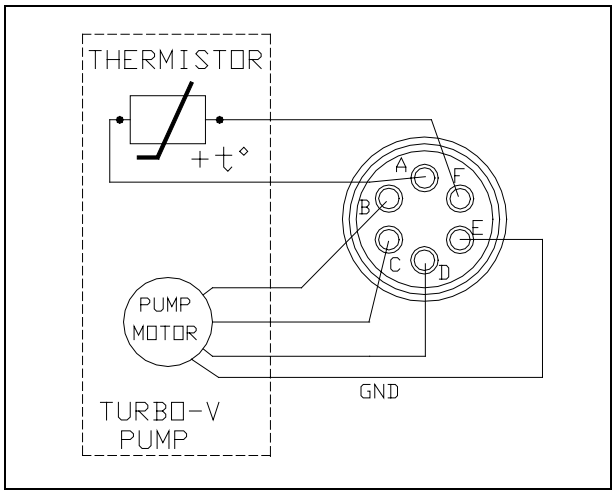

The turbopump is connected to the controller through an 6-pin connector. Pins B, C and D are the 3-phase supply to the motor, pins A and F are connected to the temperature sensor (NTC type, 30 KΩ resistance at 25° C) and pin E is connected to the pump ground.

If the temperature sensor is disconnected, the pump will not start. To prevent damage to the pump when the temperature exceeds 60° C, the sensor automatically cuts out the power supply.

USE IN PRESENCE OF MAGNETIC FIELDS

Magnetic fields induce eddy currents in the rotor of a turbomolecular pump that tend to oppose to its rotation.

The result is increased electrical power consumption by the motor, most of which is dissipated in the rotor.

In general, therefore, an increase in pump current can be expected.

ACCESSORIES AND SPARE PARTS

DESCRIPTION	PART NUMBER
Mains cable NEMA Plug, 3m long	969-9958
Mains cable European Plug, 3m long	969-9957
Serial cable and Software	969-9883
Fan extension cable	969-9949

VARIAN

Request for Return

ISO 9001 REGISTERED

1. A Return Authorization Number (RA#) **WILL NOT** be issued until this Request for Return is completely filled out, signed and returned to Varian Customer Service.
2. Return shipments shall be made in compliance with local and international **Shipping Regulations** (IATA, DOT, UN).
3. The customer is expected to take the following actions to ensure the **Safety** of workers at Varian: (a) Drain any oils or other liquids, (b) Purge or flush all gasses, (c) Wipe off any excess residues in or on the equipment, (d) Package the equipment to prevent shipping damage, (for Advance Exchanges please use packing material from replacement unit).
4. Make sure the shipping documents clearly show the RA# and then return the package to the Varian location nearest you.

North and South America
Varian Vacuum Technologies
121 Hartwell Ave
Lexington, MA 02421
Phone : +1 781 8617200
Fax: +1 781 8609252

Europe and Middle East
Varian SpA
Via Flli Varian 54
10040 Leini (TO) – ITALY
Phone: +39 011 9979111
Fax: +39 011 9979330

Asia and ROW
Varian Vacuum Technologies
Local Office

CUSTOMER INFORMATION

Company name: ……

Contact person: Name: …… Tel: ……

Fax: …… E-Mail: ……

Ship Method: …… Shipping Collect #: …… P.O.#: ……

Europe only: VAT reg. Number: …… *USA only*: ☐ Taxable ☐ Non-taxable

Customer Ship To: …… Customer Bill To: ……

……

……

……

……

PRODUCT IDENTIFICATION

Product Description	Varian P/N	Varian S/N	Purchase Reference

TYPE OF RETURN *(check appropriate box)*

☐ Paid Exchange ☐ Paid Repair ☐ Warranty Exchange ☐ Warranty Repair ☐ Loaner Return
☐ Credit ☐ Shipping Error ☐ Evaluation Return ☐ Calibration ☐ Other ……

HEALTH and SAFETY CERTIFICATION

Varian Vacuum Technologies **CAN NOT ACCEPT** any equipment which contains **BIOLOGICAL HAZARDS** or **RADIOACTIVITY**. Call Varian Customer Service to discuss alternatives if this requirement presents a problem.

The equipment listed above (check one):

☐ **HAS NOT** been exposed to any toxic or hazardous materials

OR

☐ **HAS** been exposed to any toxic or hazardous materials. In case of this selection, check boxes for any materials that equipment was exposed to, check all categories that apply:

☐ Toxic ☐ Corrosive ☐ Reactive ☐ Flammable ☐ Explosive ☐ Biological ☐ Radioactive

List all toxic or hazardous materials. Include product name, chemical name and chemical symbol or formula.

……

Print Name: …… Customer Authorized Signature: ……

Print Title: …… Date: ……/……/……

NOTE: If a product is received at Varian which is contaminated with a toxic or hazardous material that was not disclosed, **the customer will be held responsible** for all costs incurred to ensure the safe handling of the product, and **is liable** for any harm or injury to Varian employees as well as to any third party occurring as a result of exposure to toxic or hazardous materials present in the product.

Do not write below this line

Notification (RA)#: …… Customer ID#: …… Equipment #: ……

VARIAN

Request for Return

ISO 9001 REGISTERED

FAILURE REPORT

TURBO PUMPS and TURBOCONTROLLERS

		POSITION	PARAMETERS	
☐ Does not start	☐ Noise	☐ Vertical	Power:	Rotational Speed:
☐ Does not spin freely	☐ Vibrations	☐ Horizontal	Current:	Inlet Pressure:
☐ Does not reach full speed	☐ Leak	☐ Upside-down	Temp 1:	Foreline Pressure:
☐ Mechanical Contact	☐ Overtemperature	☐ Other:	Temp 2:	Purge flow:
☐ Cooling defective		……	OPERATION TIME:	

TURBOCONTROLLER ERROR MESSAGE:

ION PUMPS/CONTROLLERS

☐ Bad feedthrough	☐ Poor vacuum
☐ Vacuum leak	☐ High voltage problem
☐ Error code on display	☐ Other

Customer application:

VALVES/COMPONENTS

☐ Main seal leak	☐ Bellows leak
☐ Solenoid failure	☐ Damaged flange
☐ Damaged sealing area	☐ Other

Customer application:

LEAK DETECTORS

☐ Cannot calibrate	☐ No zero/high backround
☐ Vacuum system unstable	☐ Cannot reach test mode
☐ Failed to start	☐ Other

Customer application:

INSTRUMENTS

☐ Gauge tube not working	☐ Display problem
☐ Communication failure	☐ Degas not working
☐ Error code on display	☐ Other

Customer application:

PRIMARY PUMPS

☐ Pump doesn't start	☐ Noisy pump (describe)
☐ Doesn't reach vacuum	☐ Over temperature
☐ Pump seized	☐ Other

Customer application:

DIFFUSION PUMPS

☐ Heater failure	☐ Electrical problem
☐ Doesn't reach vacuum	☐ Cooling coil damage
☐ Vacuum leak	☐ Other

Customer application:

FAILURE DESCRIPTION

(Please describe in detail the nature of the malfunction to assist us in performing failure analysis):

NOTA: Su richiesta questo documento è disponibile anche in Tedesco, Italiano e Francese.
REMARQUE : Sur demande ce document est également disponible en allemand, italien et français.
HINWEIS: Auf Aufrage ist diese Unterlage auch auf Deutsch, Italienisch und Französisch erhältlich.

Sales and Service Offices

Argentina
Varian Argentina Ltd.
Sucursal Argentina
Av. Ricardo Balbin 2316
1428 Buenos Aires
Argentina
Tel: (54) 1 783 5306
Fax: (54) 1 786 5172

Australia
Varian Australia Pty Ltd.
679-701 Springvale Road
Mulgrave, Victoria ZZ 3170
Australia
Tel: (61) 395607133
Fax: (61) 395607950

Benelux
Varian Vacuum Technologies
Rijksstraatweg 269 H,
3956 CP Leersum
The Netherlands
Tel: (31) 343 469910
Fax: (31) 343 469961

Brazil
Varian Industria e Comercio Ltda.
Avenida Dr. Cardoso de Mello 1644
Vila Olimpia
Sao Paulo 04548 005
Brazil
Tel: (55) 11 3845 0444
Fax: (55) 11 3845 9350

Canada
Central coordination through:
Varian Vacuum Technologies
121 Hartwell Avenue
Lexington, MA 02421
USA
Tel: (781) 861 7200
Fax: (781) 860 5437
Toll Free: (800) 882 7426

China
Varian Technologies - Beijing
Room 1201, Jinyu Mansion
No. 129A, Xuanwumen Xidajie
Xicheng District
Beijing 1000031 P.R. China
Tel: (86) 10 6608 1530
Fax: (86) 10 6608 1534

France and Wallonie
Varian s.a.
7 avenue des Tropiques
Z.A. de Courtaboeuf – B.P. 12
Les Ulis cedex (Orsay) 91941
France
Tel: (33) 1 69 86 38 13
Fax: (33) 1 69 28 23 08

Germany and Austria
Varian Deutschland GmbH
Alsfelder Strasse 6
Postfach 11 14 35
64289 Darmstadt
Germany
Tel: (49) 6151 703 353
Fax: (49) 6151 703 302

India
Varian India PVT LTD
101-108, 1st Floor
1010 Competent House
7, Nangal Raya Business Centre
New Delhi 110 046
India
Tel: (91) 11 5548444
Fax: (91) 11 5548445

Italy
Varian Vacuum Technologies
Via F.lli Varian, 54
10040 Leini, (Torino)
Italy
Tel: (39) 011 997 9111
Fax: (39) 011 997 9350

Japan
Varian Vacuum Technologies
Sumitomo Shibaura Building, 8th Floor
4-16-36 Shibaura
Minato-ku, Tokyo 108
Japan
Tel: (81) 3 5232 1253
Fax: (81) 3 5232 1263

Korea
Varian Technologies Korea, Ltd.
Shinsa 2nd Bldg. 2F
966-5 Daechi-dong
Kangnam-gu, Seoul
Korea 135-280
Tel: (82) 2 3452 2452
Fax: (82) 2 3452 2451

Mexico
Varian S.A.
Concepcion Beistegui No 109
Col Del Valle
C.P. 03100
Mexico, D.F.
Tel: (52) 5 523 9465
Fax: (52) 5 523 9472

Taiwan
Varian Technologies Asia Ltd.
18F-13 No.79, Hsin Tai Wu Road
Sec. 1, Hsi Chih
Taipei Hsien
Taiwan, R.O.C.
Tel: (886) 2 2698 9555
Fax: (886) 2 2698 9678

UK and Ireland
Varian Ltd.
28 Manor Road
Walton-On-Thames
Surrey KT 12 2QF
England
Tel: (44) 1932 89 8000
Fax: (44) 1932 22 8769

United States
Varian Vacuum Technologies
121 Hartwell Avenue
Lexington, MA 02421
USA
Tel: (781) 861 7200
Fax: (781) 860 5437
Toll Free: (800) 882 7426

Other Countries
Varian Vacuum Technologies
Via F.lli Varian, 54
10040 Leini, (Torino)
Italy
Tel: (39) 011 997 9111
Fax: (39) 011 997 9350

Internet Users:

Customer Service & Technical Support:
vtt.customer.service@varianinc.com

Worldwide Web Site:
www.varianinc.com/vacuum

Order On-line:
www.evarian.com

Representatives in most countries

VARIAN

11/01