VARIAN

vacuum technologies

MoniTorr RS485

Model 969-9255
Model 969-9256

(GB) INSTRUCTION MANUAL

87-900-959-01 (D)
JULY 2006

MoniTorr RS485

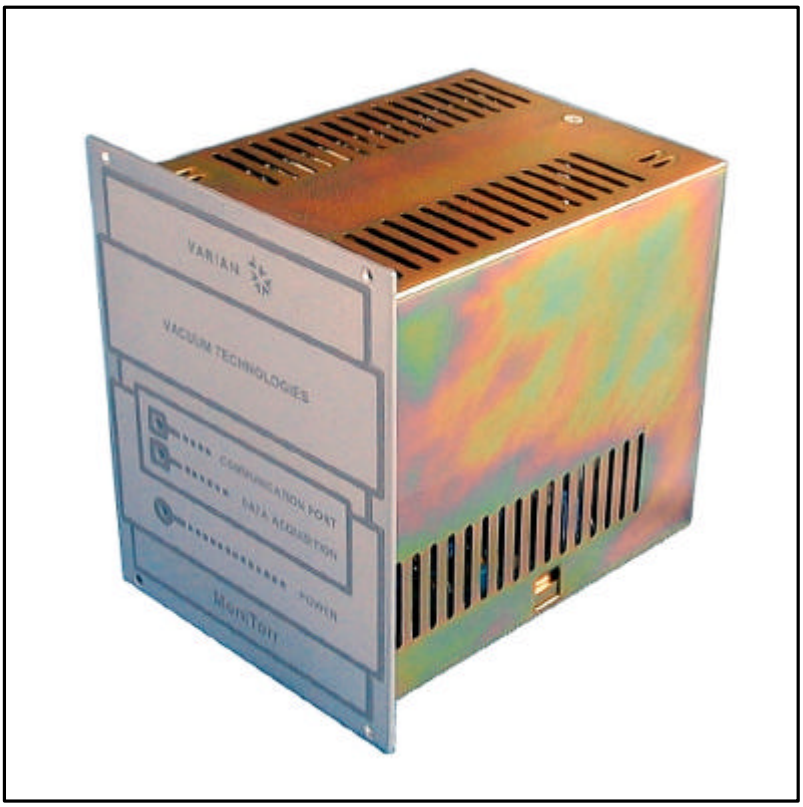

VARIAN

vacuum technologies

Dear Customer,

Thank you for purchasing a VARIAN vacuum product. At VARIAN Vacuum Technologies we make every effort to ensure that you will be satisfied with the product and/or service you have purchased.

As part of our Continuous Improvement effort, we ask that you report to us any problem you may have had with the purchase or operation of our product. On the back side you find a Corrective Action Request form that you may fill out in the first part and return to us.

This form is intended to supplement normal lines of communications and to resolve problems that existing systems are not addressing in an adequate or timely manner.

Upon receipt of your Corrective Action Request we will determine the Root Cause of the problem and take the necessary actions to eliminate it. You will be contacted by one of our employees who will review the problem with you and update you, with the second part of the same form, on our actions.

Your business is very important to us. Please, take the time and let us know how we can improve.

Sincerely,

Sergio PIRAS

Vice President and General Manager
VARIAN Vacuum Technologies

Note: Fax or mail the Customer Request for Action (see backside page) to VARIAN Vacuum Technologies (Torino) - Quality Assurance or to your nearest VARIAN representative for onward transmission to the same address.

CUSTOMER REQUEST FOR CORRECTIVE / PREVENTIVE / IMPROVEMENT ACTION

TO : VARIAN VACUUM TECHNOLOGIES TORINO - QUALITY ASSURANCE

FAX N° : XXXX - 011 - 9979350

ADDRESS: VARIAN S.p.A. - Via F.lli Varian, 54 - 10040 Leinì (Torino) - Italy

E-MAIL : marco.marzio@varianinc.com

NAME	COMPANY	FUNCTION
_____	_____	_____

ADDRESS : _____

TEL. N° : _____ FAX N° : _____

E-MAIL : _____

PROBLEM / SUGGESTION :

_____

REFERENCE INFORMATION (model n°, serial n°, ordering information, time to failure after installation, etc.) :

_____

DATE _____

CORRECTIVE ACTION PLAN / ACTUATION LOG N° _____
(by VARIAN VTT)

_____

XXXX = Code for dialing Italy from your country (es. 01139 from USA; 00139 from Japan, etc.)

VARIAN

INSTRUCTIONS FOR USE 1
OVERVIEW 1
STORAGE 1
BEFORE INSTALLATION 1
INSTALLATION 2
USAGE 2
Controls, LEDs and Connectors 2
USAGE PROCEDURES 4
Powering on the MoniTorr 4
Operation 4
MAINTENANCE 4

TECHNICAL INFORMATION 5

MONITORR CONTROLLER DESCRIPTION 5
CONTROLLER SPECIFICATIONS 6
CONTROLLER OUTLINE 6
INSTALLATION 7
MoniTorr RS485 Installation with the Controller and Pump 7
Accelerometer Installation 7
MoniTorr RS485 Installation on the Network and on the Main PC 8
Installing the File Download Software 9
INTERCONNECTIONS 12
FUSE HOLDER 13
RS 485 J1 and J6 Wire Version (NTW1 and NTW2) Ports 13
J2 (Controller) RS 485 Port 13
J6 Fiber Version (NTW2) Optical Port 13
J3 Input Connector 14
Connector J10 (Accelerometer) 14
USE 15
General 15
Operating Procedure 15
Transfer Software 15
Functionality 15
Modifying the Parameters (Filetran) 16
Archive Saving Method Procedure 16
Storing the Files Transferred 16
Power Failure 17
REPLACEMENT 17
General 17
Troubleshooting 17
Accessories and spare parts 17

OVERVIEW

This equipment is intended for professional use. Before using such equipment, the operator must carefully read this instruction manual and any other additional information provided by Varian. Varian declines all responsibility regarding the total or even partial failure to comply with the instructions provided, the improper usage of the equipment by untrained personnel, unauthorized interventions or usage that fails to comply with specific national regulations. The MoniTorr controller utilizes solid state components and has autodiagnostic and self-protection features.
This device analyzes the operating conditions of the turbopump so as to predict any possible pump failure caused by excessive bearing wear. The system continuously monitors the pump, storing in memory all the data relating to the latest period of operation.

The MoniTorr RS485 allows to:

- perform programmed maintenance on the turbopump
- continuously monitor and store the turbopump controller-MoniTorr system operating conditions
- identify the wear conditions of one or two bearings.

The following sections provide all the information needed to guarantee the operator's safety when using the equipment. Detailed information is provided in the appendix entitled "Technical Information".

The following conventions are used in this manual:

DANGER!

The Danger messages attract the operator's attention to a specific procedure or step that could cause serious injury if not performed correctly.

WARNING!

The Warning messages are provided before procedures that could damage the equipment if not observed.

NOTE

Notes contain important information extracted from the text.

STORAGE

The following environmental conditions must be complied with during the MoniTorr transportation and storage:

- temperature: from -20 °C to +70 °C
- relative humidity: 0 - 95% (non-condensing)

BEFORE INSTALLATION

The MoniTorr RS485 comes in a special protective packaging; if you detect any sign of damage that may have been caused during transportation, contact your local sales office. When unpacking the MoniTorr, be particularly careful to avoid dropping or bumping it. Do not dispose the packaging material in the environment. This material is completely recyclable and complies with the ECC directive 85/399 that safeguards the environment.

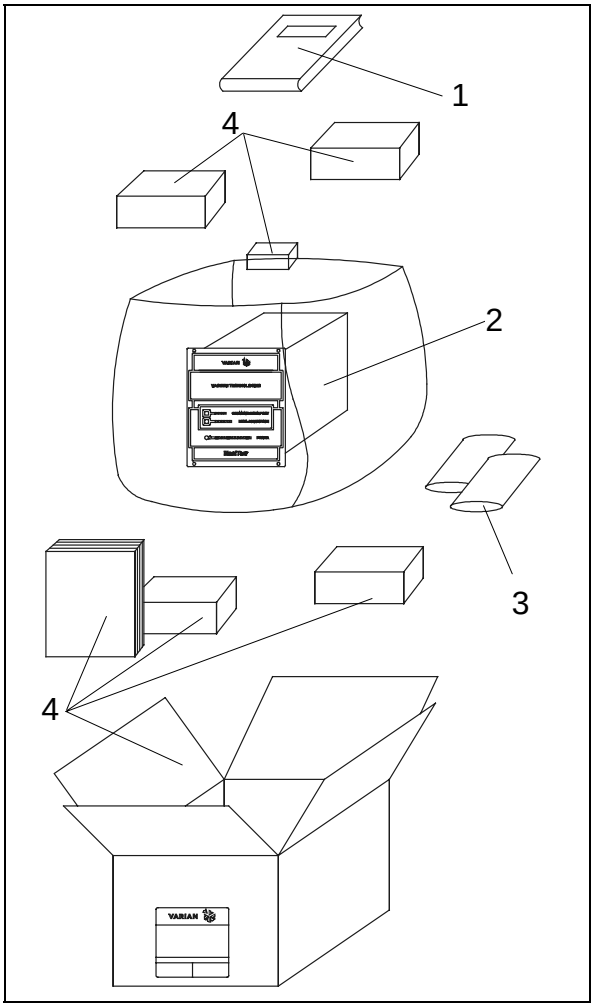

MoniTorr RS485 Packaging

1. MoniTorr instruction manual
2. MoniTorr unit
3. MoniTorr accessory envelope
4. Packaging

INSTALLATION

DANGER!

The controller comes with a three-wire power cord equipped with internationally approved plugs. Always use this power cord and insert the plug into an appropriately grounded socket to avoid electrical discharges.
There are voltages inside the controller that could cause serious injury or death. Before proceeding with any controller installation or maintenance procedure, unplug the controller from the electrical outlet.

NOTE

The controller can be installed either on a table or inside an appropriate rack. In both cases the cooling air flow must circulate freely inside the apparatus. Do not install nor use the controller in environments exposed to atmospheric agents (rain, frost, snow) dust, aggressive gases, in explosive environments or with a high risk of fire.

The following environmental conditions must be complied with during operation:

- temperature: 0 °C to +40 °C;
- relative humidity: 0 - 95% (non-condensing).

Refer to the section "Technical Information" for the procedures regarding installation and connection to the related pump.

USAGE

This section provides the major operating procedures. For more information and for the procedures that involve connections or options, refer to the section “Usage” in chapter “Technical Information”.
Before using the MoniTorr perform all connections and refer to the manual of the connected pump.

DANGER!

To avoid personal injury and damage to the apparatus, if the pump needs to be rested on a table make sure that the table is stable. Never operate the pump if the input flange is not connected to the system or not closed by the closing flange.

Controls, LEDs and Connectors

Shown below is the controller’s control panel and interconnection panels. For more information refer to the section “Technical Information”.

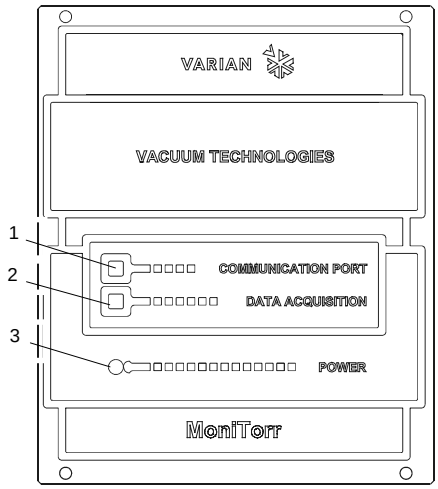

1. **COMMUNICATION PORT**: Flashing yellow LED. It signals the data exchange via serial port with a personal computer. The flashing frequency is not fixed and depends on the status of the data exchange.
2. **DATA ACQUISITION**: Yellow LED that indicates when the MoniTorr is receiving data from an accelerometer. This LED usually flashes at a frequency between 0.1 and 0.5 seconds.
3. **POWER**: Green LED that indicates when the controller is powered on. When the main power switch is set to the ON position, this LED is connected directly to the line voltage.

MoniTorr 969-9255 and 969-9256

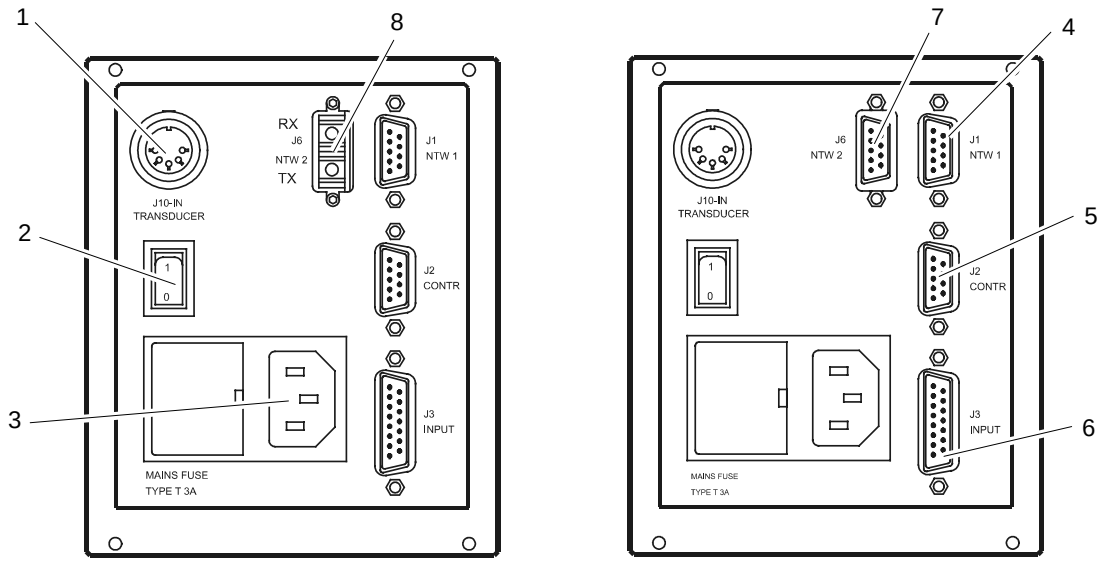

1. Accelerometer connector.
2. Line voltage switch.
3. Power cord connector and fuse chamber.
4. Network 1 RS485 connector.
5. Turbo pump controller connector.
6. Synchronization input
7. Network 2 RS485 connector.
8. Network 2 optical fiber connector.

MoniTorr RS485 969-9255 and 969-9256 Rear Panel

USAGE PROCEDURES

Powering on the MoniTorr

Power on the MoniTorr by plugging the power cord into the electrical outlet and setting the line voltage switch to the I position. The POWER LED comes on and the system proceeds with its self-configuration routine by automatically detecting the type of pump and controller connected. Data acquisition and processing will be automatically activated the moment in which the turbo pump reaches its maximum speed (set using the controller's Speed Adjust parameter).

Operation

At predefined intervals, the system will also store data related to the vibration spectrums, power and temperature in addition to other data detected by the Turbo controller thus making it possible to analyze the history of the entire Turbopump-Controller-MoniTorr system throughout the latest period of operation. All the data stored in memory can then be transferred to a PC (by means of the appropriate software; refer to Technical Information) where it is stored and where it can then be analyzed by specialized personnel.

MAINTENANCE

The controllers of the MoniTorr series do not require maintenance. Any intervention must be carried out by authorized personnel.

In case of failure, the Varian Repair Service is available or Advanced Exchange Service that provides you with a regenerated controller in replacement of the faulty one.

DANGER!

Unplug the power cord before proceeding with any type of intervention on the controller.

If a controller needs to be scraped, proceed in compliance with the specific national norms.

DISPOSAL

Meaning of the "WEEE" logo found in labels
The following symbol is applied in accordance with the EC WEEE (Waste Electrical and Electronic Equipment) Directive.
This symbol (**valid only in countries of the European Community**) indicates that the product it applies to must NOT be disposed of together with ordinary domestic or industrial waste but must be sent to a differentiated waste collection system.
The end user is therefore invited to contact the supplier of the device, whether the Parent Company or a retailer, to initiate the collection and disposal process after checking the contractual terms and conditions of sale.

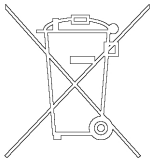

MONITORR CONTROLLER DESCRIPTION

The MoniTorr RS485 is a device with a DSP electronic architecture and with dimensions equivalent to 1/4 of a rack. It can work with the ICE series controllers, with HT series controllers and with the navigator controllers delivered by Varian later than 01/10/03. For any controller previous version please contact vtt.technical.support@varianinc.com.

The system has been designed to continuously monitor the turbopump to which it is associated and to maintain in memory all data regarding the turbopump's last period of operation (default = 1 month).

The MoniTorr can work autonomously, replying to the queries received from the local PC via RS485.

It is available in two versions:

- 969-9255 with standard RS485
- 969-9256 with fiber optic.

The MoniTorr is physically connected to the pump's controller from which it receives certain parameters.

For example:

- Current absorption
- Power absorption
- Temperature of the upper bearing.

The accelerometer secured to the turbopump detects the spectrum of the low frequency (150 - 2,000 Hz) and of the high frequency (2,000 - 12,000 Hz) vibrations.

The MoniTorr RS485 can be limited to an RS485 network in order to control more than one pump in one system. The maximum number of monitors in one network is 32.

WARNING!

The Turbo-V controller must be powered with 3-wire power cord (see orderable parts table) and plug (internationally approved) for user's safety.
Use this power cord and plug in conjunction with a properly grounded power socket to avoid electrical shock and to satisfy CE requirements . High voltage developed in the controller can cause severe injury or death. Before servicing the unit, disconnect the input power cable.

The following subsystems are embedded into the PCB:

- Power supply
- Amplifier and filter of the signals from the accelerometer
- Signal acquisition logics
- DSP
- 1 MB Flash EPROM used as the mass storage memory
- Serial data exchange management clock and logic
- EEPROM for the storage of the configuration parameters
- Real time clock with lithium back up battery.

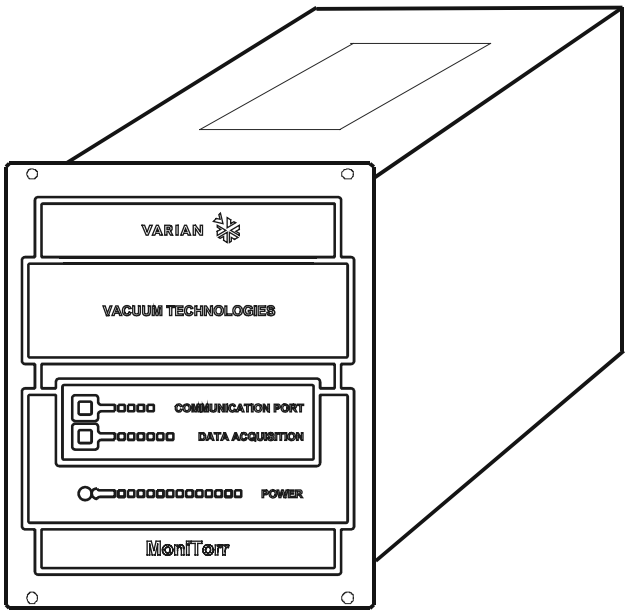

MoniTorr RS485 Controller

CONTROLLER SPECIFICATIONS

Operation	301/1001 Navigator 551/1001 with HT controller 300/1000 ICE 2000 HT/ICE
Input: Voltage Frequency Power	 100-240 Vac 1-phase 50/60 Hz 30 VA maximum
Operating temperature	0 °C to +45 °C

Storage temperature	-20 °C to +70 °C
Fuse (mains)	2 x T 1A (slow blow) disregarding the mains
Radio interference suppression	EN 55011 class A group 1 IEC1000-4 -2/3/4
Safety	EN 61010 - 1
Weight:	0.9 Kg (2 lbs)

CONTROLLER OUTLINE

The outline dimensions for the MoniTorr controllers are shown in the following figures.

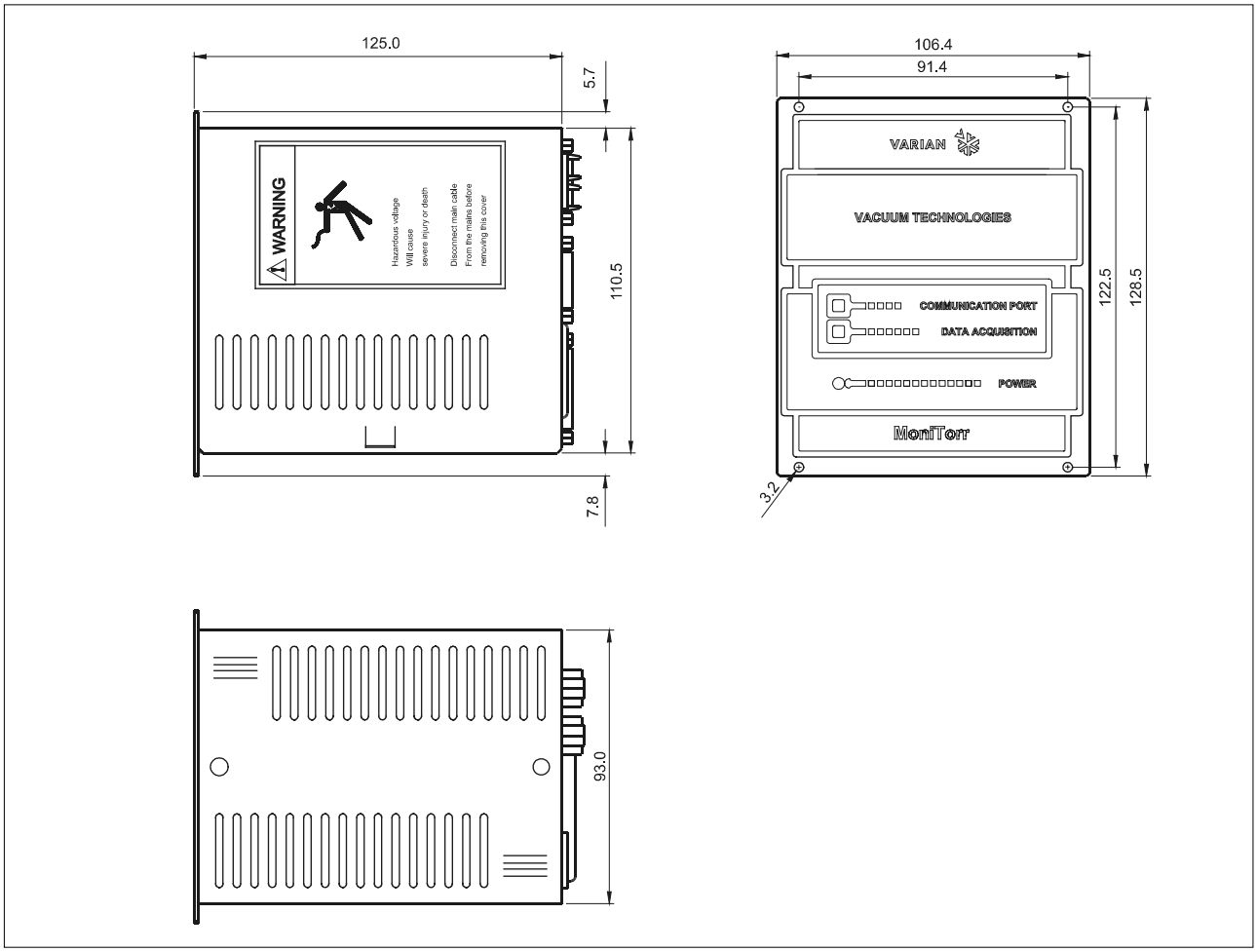

Controller Outline

INSTALLATION

MoniTorr RS485 Installation with the Controller and Pump

The following block diagram provides a schematic approach to the connections to be made for a correct MoniTorr RS485 installation with a pump and controller. This connection has to be repeated for each MoniTorr connected on the network.

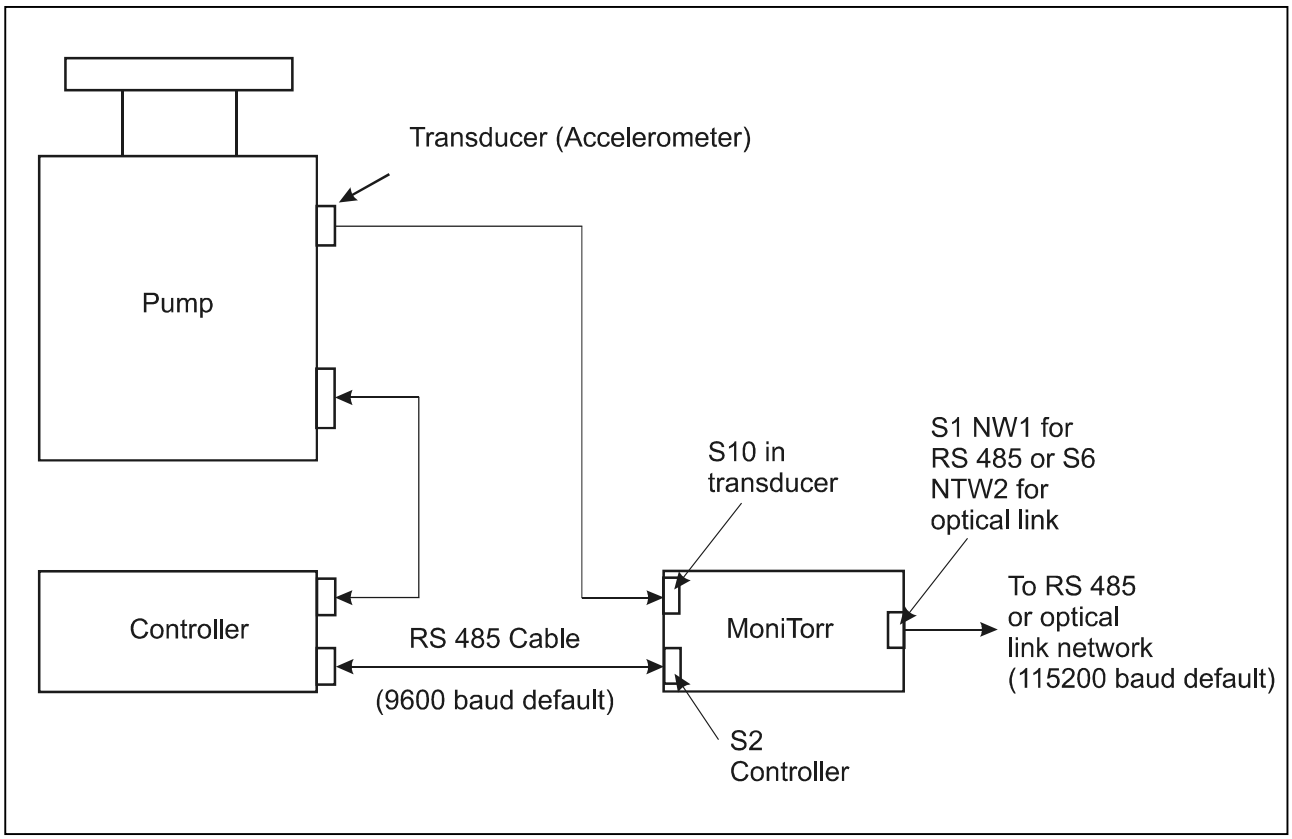

MoniTorr RS 485 Installation with Pump and Controller

When performing the connections shown in the diagram above, pay close attention to the installation of the accelerometer.

Accelerometer Installation

To correctly install the accelerometer on the turbopump, use the specific support according to the following figure.

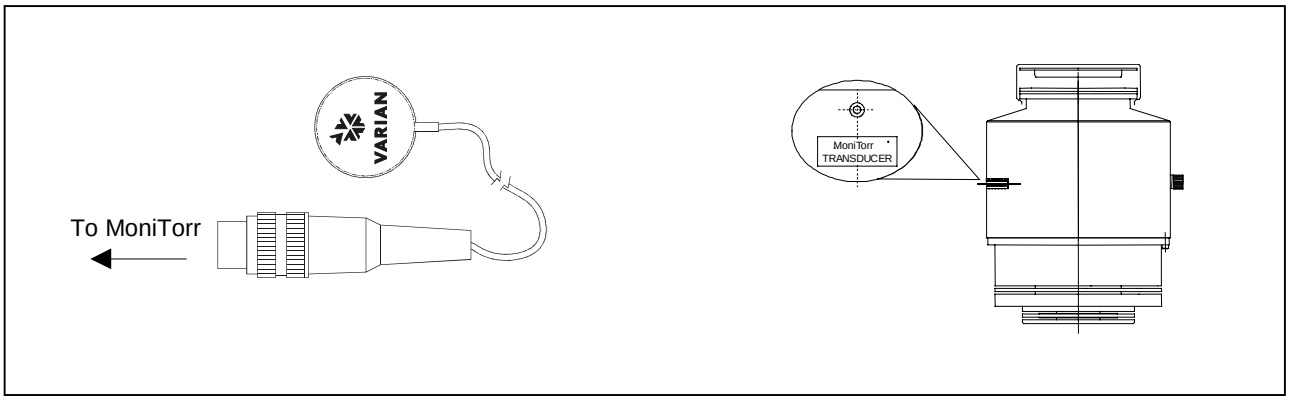

Accelerometer Support

MoniTorr RS485 Installation on the Network and on the Main PC

The MoniTorr RS485 has been specifically designed for connection with another MoniTorr through an RS485 or optical link network.

NOTE

The serial address of the MoniTorr RS485 is provided by the controller. Every controller must therefore have a different serial address so as to avoid conflicts on the network. Refer to the controller manual for instructions on how to change the serial address. At the first power on, to make sure that the MoniTorr acquires the controller's serial number, leave it connected to the powered controller for about one minute.

The following figure shows the connection of the MoniTorr to the RS485 network. If the connection cable is too long or if it crosses noisy environments, a twisted and shielded cable should be used.

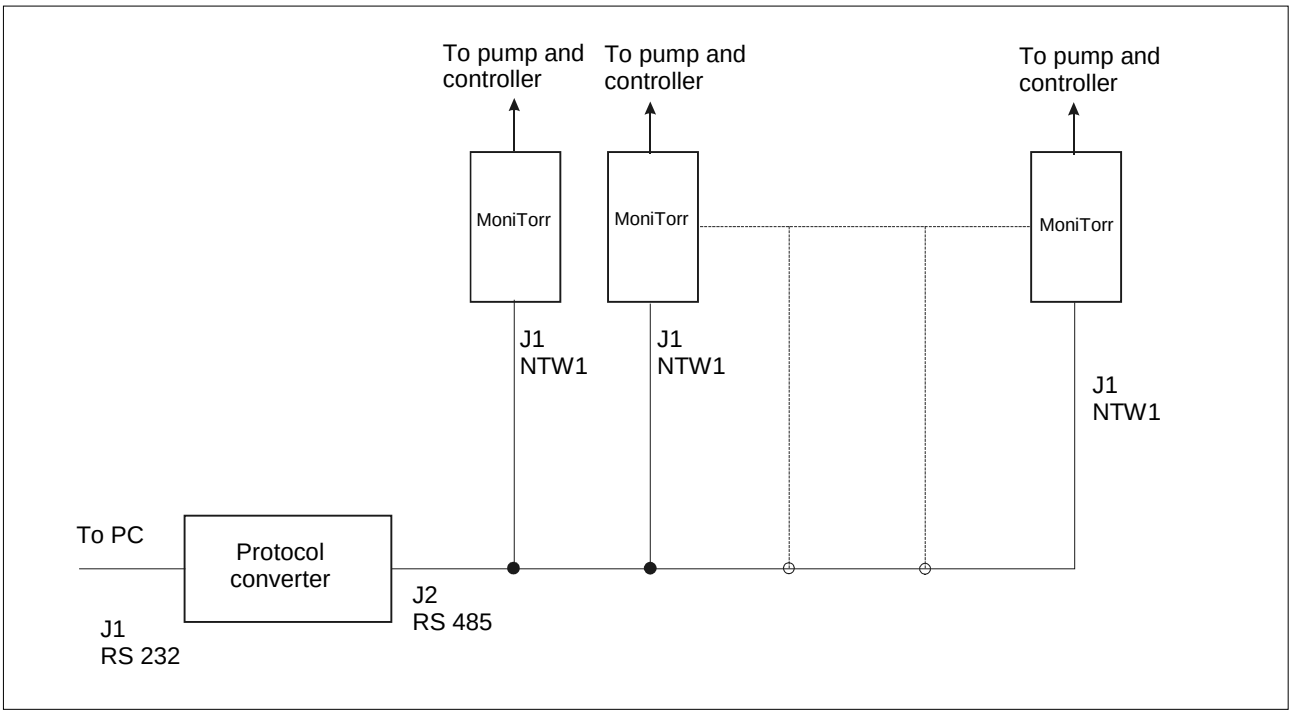

It is possible to connect from 1 to 32 MoniTorrs on the same network.

If the optical link is used, refer to the following figure for the connection.

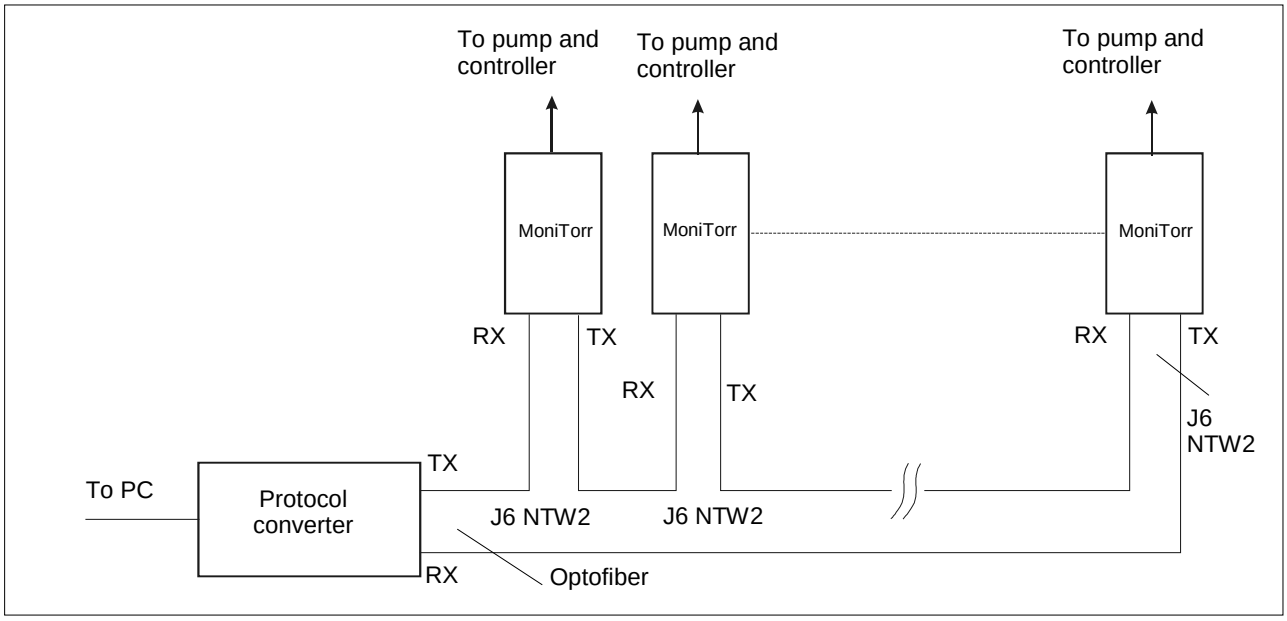

Be very careful when using fibre optic cables. Do not bend fiber optic cable more sharply than the minimum recommended bend radius given in its specification sheet. For our system we've used Agilent Technologies ® connector HFBR – 4531 with fiber cable HFBR – RUS 100. For any further information please refer to fiber Agilent Technical Data.

Also in this case the maximum number of MoniTorrs in the network is 32. If only one MoniTorr is used, connect the RX of the parallel converter with the TX of the MoniTorr and viceversa.

Protocol Converter PN 969-9258 or PN 969-9259

NOTE

The protocol converter PN 969-9258 or PN 969-9259 is not strictly needed for MoniTorr operation. It is also possible to use the standard RS232 to RS485 converter.

Installing the File Download Software

The MoniTorr comes with the software needed to transfer via RS232 all the data stored. To install the software simply insert diskette No. 1 into the personal computer drive and run the Setup program.

If the personal computer uses with Windows 2000 Professional Operating System, copy the three diskettes into a temporary directory in the PC and then run the W2000.bat file from the hard disk.

In the two cases the following screen will be displayed on the personal computer:

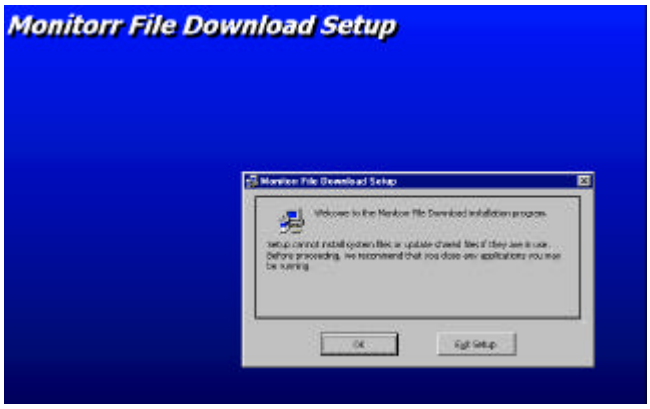

Close all the applications and then select OK. The following screen will now displayed on the personal computer monitor:

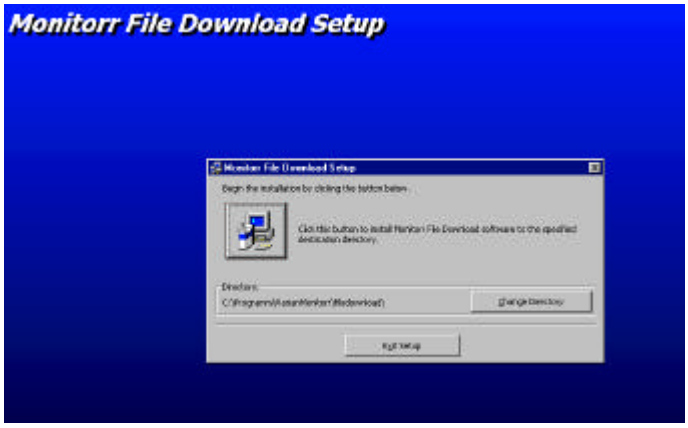

NOTE

It is suggested that you maintain the proposed directory and path so as to facilitate the identification of the files generated by the system.

Click on the figure to continue with the installation. At this point the following screen is displayed on the personal computer monitor.

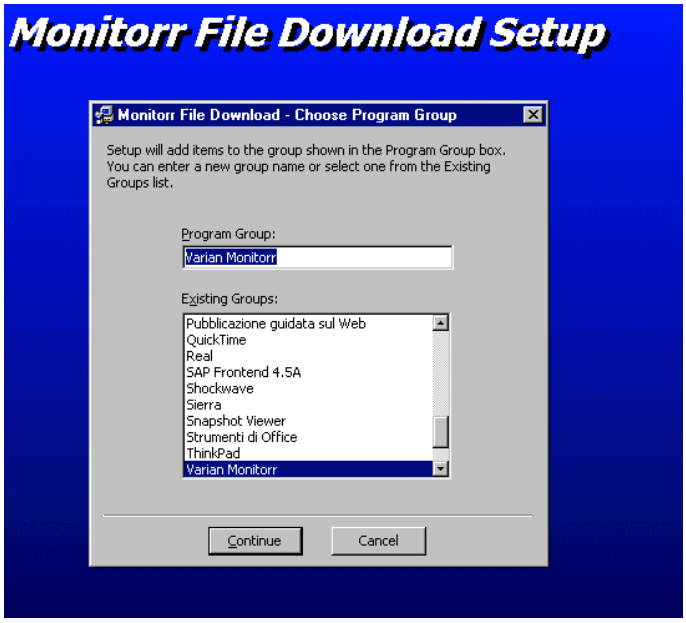

NOTE

It is suggested that you maintain the proposed program group so as to facilitate the identification of the program.

Select continue to go on with the installation. The following screen is displayed on the personal computer monitor.

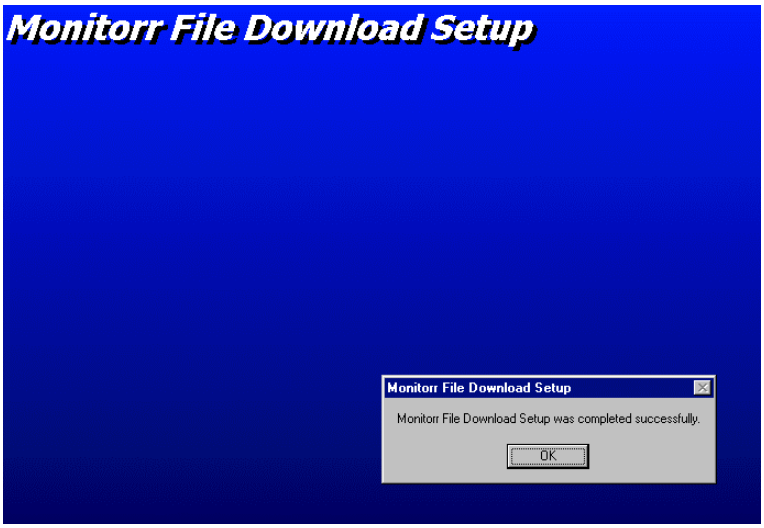

Select OK to conclude the installation.

NOTE

If during installation the program finds some system files that are out of date, you will be prompted to restart the computer. In this case proceed to restart the computer and repeat the installation procedure.

INTERCONNECTIONS

The following figure shows the MoniTorr interconnections.

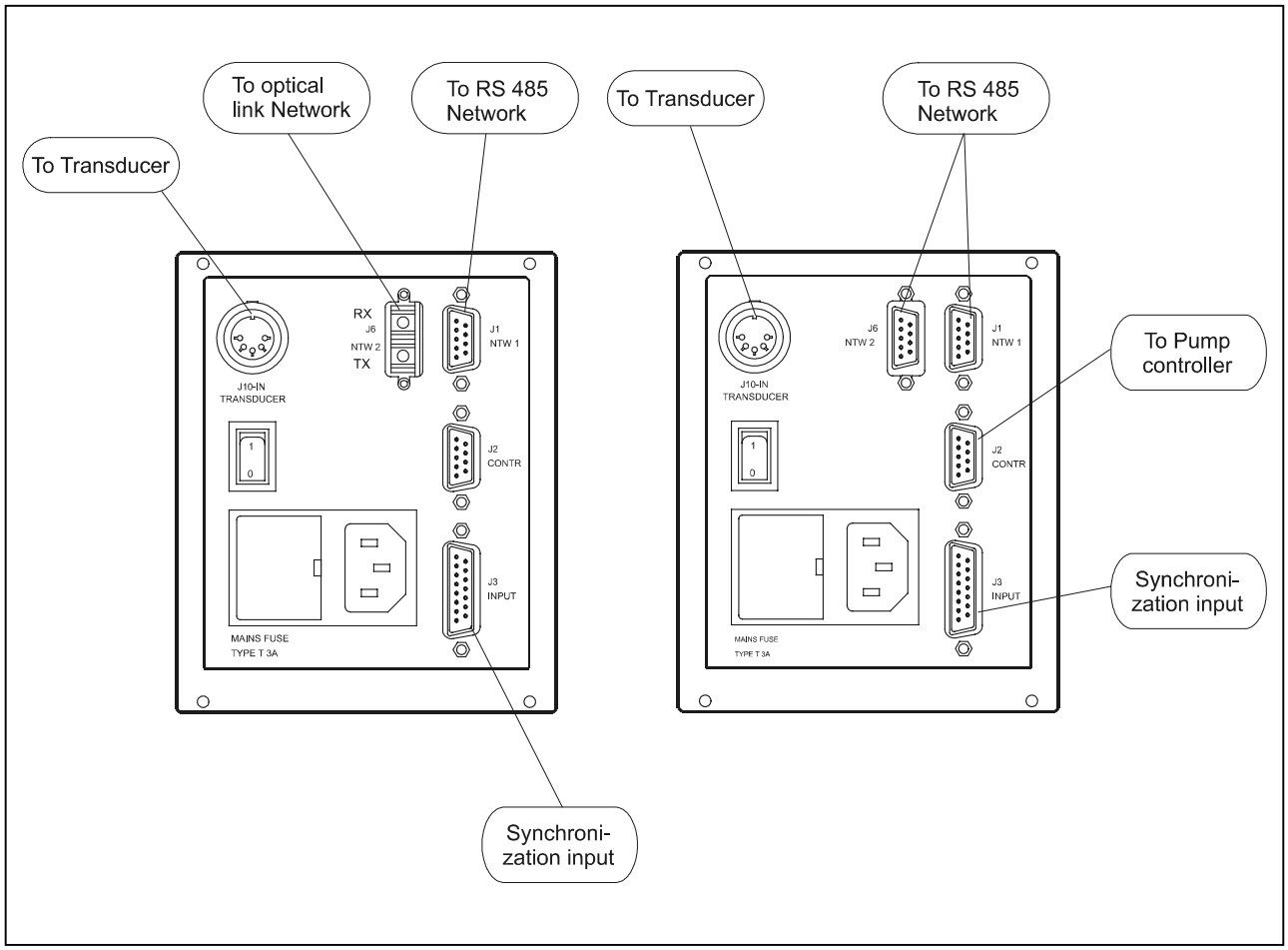

MoniTorr's Interconnections

FUSE HOLDER

Proceed as follows to replace the fuses:

- Unplug the power cord from the controller rear panel socket.
- Using a small screwdriver, pull out the voltage selector and fuses.
- Replace the fuse.
  Use only T-type fuses of the following characteristics:
  - 1 A (slow blow)

RS 485 J1 and J6 Wire version (NTW1 and NTW2) Ports

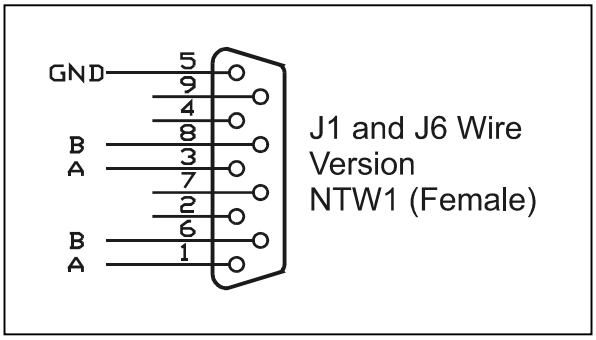

Communication Port Connections

Transmission Channel Characteristics

Levels:	RS 485\
Baud rate:	115200/57600/38400 19200/9600/4800 2400/1200/300/110 programmable
Character length:	8 bits
Parity:	none
Stop bit:	1 bit
Protocoll:	master (PC) / slave (MoniTorr)
Max. devices	32.

J2 (Controller) RS 485 Port

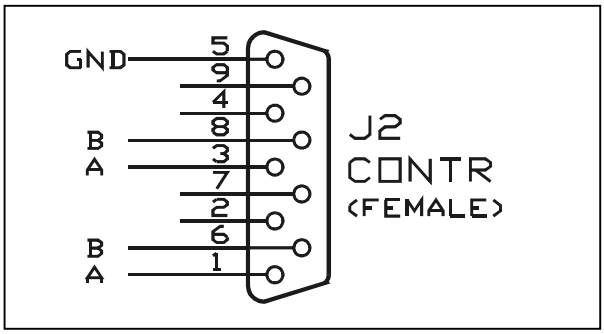

J2 (Controller) RS 485 Port

Transmission Channel Characteristics

Levels:	RS 485
Baud rate:	115200/57600/38400 19200/9600/4800 2400/1200/300/110 programmable
Character length:	8 bits
Parity:	none
Stop bit:	1 bit
Protocoll:	master (Monitorr) / slave (Controller)
Max. devices	Only 1 Controller.

J6 Fiber Version (NTW2) Optical Port

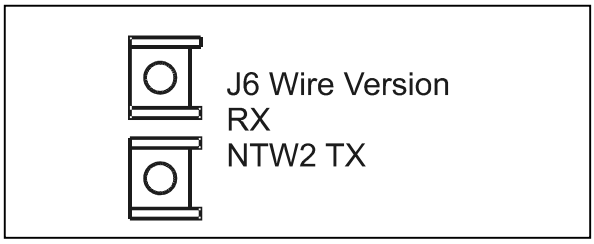

Communication Port Connections

Transmission Channel Characteristics

Wavelength:	650 mm
TX driver:	HFBR 1528
RX driver:	HFBR 2528
Suggested Optical cable:	1 mm diameter Plastic Optical Fiber (POF) HFBR-RUS100
Suggested Optical connector:	HFBR 4531
Max. connection Length:	50 m (with suggested cable and connector)
Baud rate:	115200/57600/38400/19200/9600 4800/2400/1200/300/110 programmable
Character length:	8 bits
Parity:	none
Stop bit:	1 bit
Protocol:	Master (PC) / Slave (MoniTorr)
Max. devices:	32

J3 Input Connector

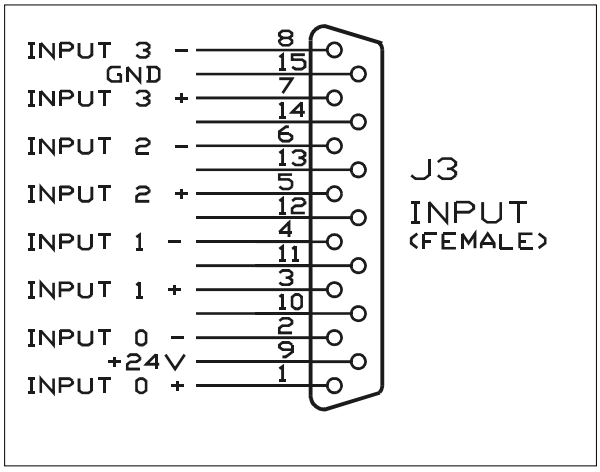

J3 Input Connector

The following figure shows the input circuit of the status inputs.

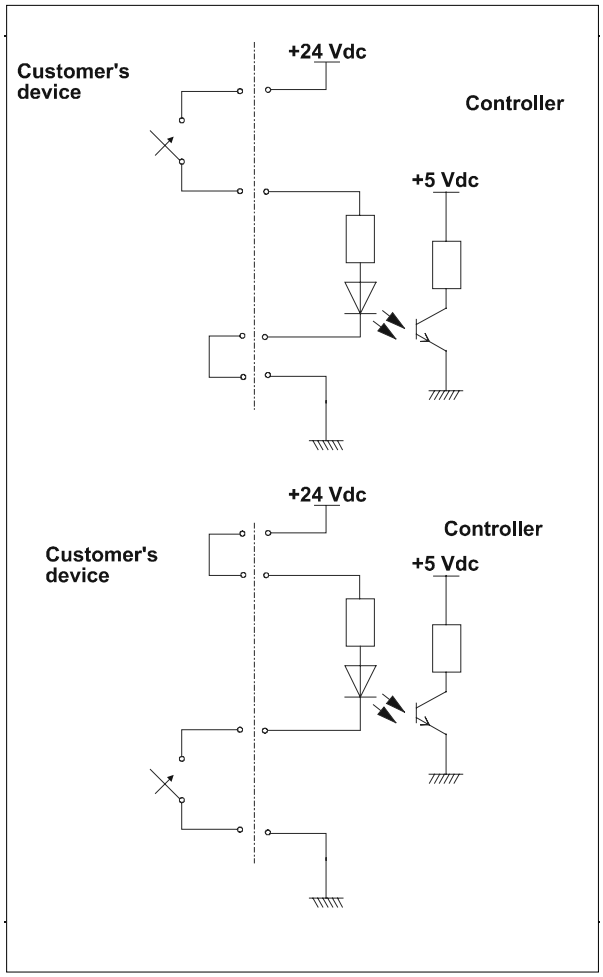

Input Circuit for Status Inputs

This inputs can be saved as the system status in the acquisition files.

Connector J10 (Accelerometer)

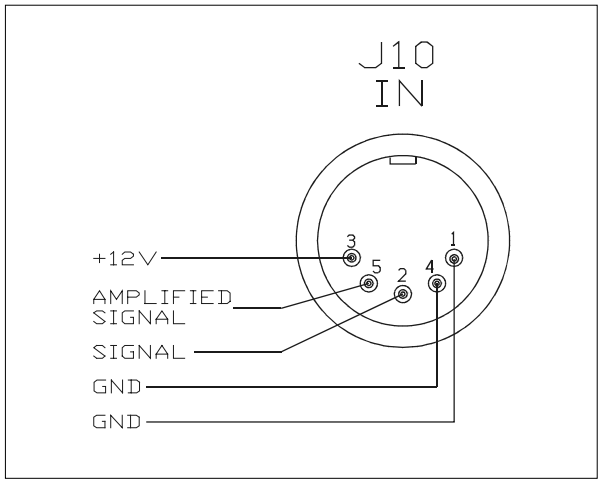

Connector J10 (Accelerometer)

USE

General

Prior to operating the MoniTorr controller, make all vacuum manifold and electrical connections and read this manual.

CAUTION!

Before plugging in the controller power cord, be sure that the selected operating voltage matches the power source to avoid equipment damage.

Operating Procedure

Proceed as follows to correctly use the controller:

- Power on the system using the main switch located on the rear panel. The related LED on the front panel will come on.

  By means of a specific procedure, the MoniTorr automatically recognizes the type of pump and controller to which it is connected and automatically configures itself accordingly.

- By using the serial interface, the MoniTorr detects when the pump's maximum rotation speed is reached. At this point the acquisition and analysis of the data deriving from the pump begins and is signalled by the flashing of the Data Acquisition LED (yellow).

  The data acquisition and processing procedure is automatically repeated at 2-minute intervals.

Transfer Software

The File Download program acquires the files present in the MoniTorrs and stores them on hard disk. This is automatically performed by the program when it is launched, and then at regular intervals depending on the parameters set.

Functionality

As soon as it is activated, FILETRAN establishes a connection with the MoniTorrs on the network and updates the data that are present on the panel displayed on the personal computer monitor.

It scans all the addresses on the network and automatically recognizes the MoniTorrs that are connected. As soon as it is activated it downloads all the files stored in all the MoniTorrs. Upon completion of this operation, it continues to scan the network and downloads the file stored only if the number is higher than 80 (factory default).

The following figure shows the File Download screen:

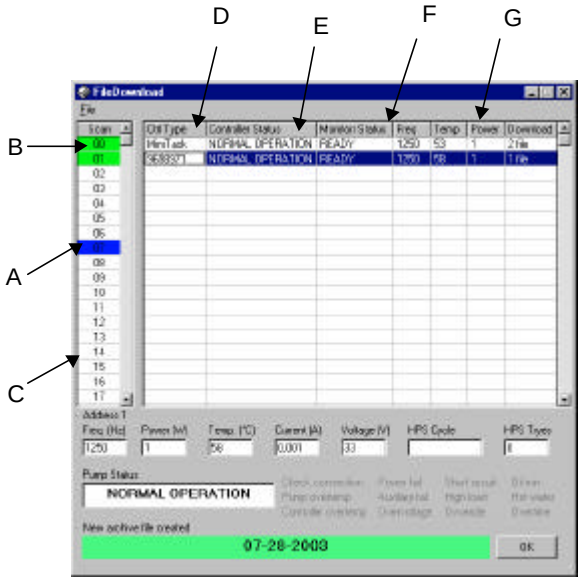

A: These fields indicate the serial addresses of the network.

B: This field indicates that a controller with the MoniTorr has been detected at that specific address.

C: This field indicates that the program is actually trying to communicate with the specific address.

D: This field indicates the model of the controller recognized.

E: This field indicates the pump model (the information is optional and sometimes cannot be shown).

F: This field indicates the status of the MoniTorr. For correct operation, the word “READY” must be written in this field.

G: This field indicates how the files are downloaded after the first time. In this case the files are downloaded when their number in the MoniTorr memory reaches 80.

H: This field indicates the following parameter for the selected pump:
- **Freq (Hz.)**: excitation frequency of electric motor
- **Power (W)**, **Current(A)** and **Voltage (V):** power, current and voltage adsorbed by controller
- **Temp (°C):** Pump Temperature
- **HPS (Cycle):** Number of High Power Start tries in pump life
- **HPS (Tries):** Number of High Power Start tries in a single High Power Start Cycle

The program is configured to work with the COM 1 serial port. If a change is required, click the right mouse button with the cursor on the Varian logo on the right-hand side of the bottom bar.

Select the Setup option and the program displays the following:

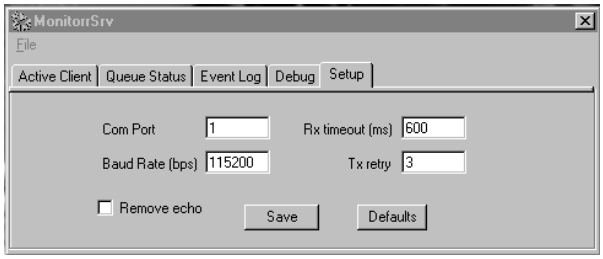

Select the COM port of the computer being used and then check whether or not all the other parameters are the same as those shown in the example. It is also very important to have the same configuration for the Remote Echo option.
At this point save the Setup and exit from the program. Exit also from the File Download program. The program will be reconfigured the next time the computer is restarted.

Modifying the Parameters (Filetran)

The operator can change the configuration of the MoniTorr parameters.

To change the configurations select one of the MoniTorrs connected to the network by positioning the cursor in the row of the MoniTorr to be modified and clicking the left mouse button. Then click the right mouse button, select Remote Device and then Set Counters. You are now prompted to enter a password; the password to be entered is: VARIAN.

The following three parameters are displayed with their respective default values:

- Acquisition time: 15 (seconds)
- Save time: 15 (minutes)
- Alarm time: 2 (seconds)

To change these parameters, enter the desired value and then save. Provided below is a description of the parameters that can be modified:

- Acquisition time: Defines the time frame between one MoniTorr acquisition and the next. It is suggested that you keep this parameter at its default value.

- Save time: Defines the time frame between two successive storage operations to the MoniTorr's local memory of the acquisition indicated above. Since the MoniTorr is capable of storing up to 100 files, this number should be selected according to the downloading time. If, for example, the downloading time is 1 month, the save time should be set as follows:

$$\text{Save time} = \frac{\text{Downtime (minutes)}}{100} = \frac{86400}{100} = 864$$

- Alarm time: Defines the timeout after which an alarm condition is signalled.

Archive Saving Method Procedure

You can periodically create a compressed archive to ready to send to Varian for vibration evaluation.

Select menu File/Archive Time and select the number of days for a periodical file download to be sent (for example 7 days)
Periodically (every Archive Time days) the file download program creates a file .cab (special compressed Microsoft Windows file) with the name of the registration day. In the file download window the customer can view a new text on green back screen with the date of the registration. By clicking on the OK button automatically an explore window* appears on the screen. You will find some acquisition files (*.mon) and a compressed archive file named according to the registration day (date.CAB). The customer should send by e-mail the compressed (.CAB) file every archive time period to Varian Technical support at the following address: "vtt.technical.support@varianinc.com"

Storing the Files Transferred

The files that are present in the MONITORR are transferred to, and stored in, a directory which is automatically created during the downloading in the personal computer where the program is run.

The default path is the following C:\VARIAN\"Archive Date"\ and the name of the archive file is "Archive Date".cab.

Where Archive Date is the date of starting acquisition plus the number of days selected in the Archive Time menu. For example if you start the acquisition in 1/1/2003 and you set an archive time of 7 days your ARCHIVE DATE is 8/01/2003.

Power Failure

In the event of a power failure (temporary or lasting a long period of time), the controller is switched off.
When power is restored, the controller will restart automatically.

REPLACEMENT

General

Replacement controllers are available on advance exchange basis through Varian service/sales organization.

WARNING!

High voltage in the controller can cause severe injury or death. Before servicing, turn power off the controller and unplug the power cord.

Troubleshooting

At power on the controller undergoes an autodiagnosis routine during which all the LEDs come on for a few seconds.

If a failure is detected the LEDs will remain on.
In this case contact Varian Technical Support.

ACCESSORIES AND SPARE PARTS

DESCRIPTION	PART NUMBER
Mains cable (European plug, 3 m long)	969-9957
Mains cable (American plug, 120 V, 3 m long)	969-9958

VARIAN

Request for Return

ISO 9001 REGISTERED

1. A Return Authorization Number (RA#) **WILL NOT** be issued until this Request for Return is completely filled out, signed and returned to Varian Customer Service.
2. Return shipments shall be made in compliance with local and international **Shipping Regulations** (IATA, DOT, UN).
3. The customer is expected to take the following actions to ensure the **Safety** of workers at Varian: (a) Drain any oils or other liquids, (b) Purge or flush all gasses, (c) Wipe off any excess residues in or on the equipment, (d) Package the equipment to prevent shipping damage, (for Advance Exchanges please use packing material from replacement unit).
4. Make sure the shipping documents clearly show the RA# and then return the package to the Varian location nearest you.

North and South America
Varian Vacuum Technologies
121 Hartwell Ave
Lexington, MA 02421
Phone : +1 781 8617200
Fax: +1 781 8609252

Europe and Middle East
Varian SpA
Via Flli Varian 54
10040 Leini (TO) – ITALY
Phone: +39 011 9979111
Fax: +39 011 9979330

Asia and ROW
Varian Vacuum Technologies
Local Office

CUSTOMER INFORMATION

Company name: ……

Contact person: Name: …… Tel: ……

Fax: …… E-Mail: ……

Ship Method: …… Shipping Collect #: …… P.O.#: ……

Europe only: VAT reg. Number: …… *USA only*: ☐ Taxable ☐ Non-taxable

Customer Ship To: …… Customer Bill To: ……

……

……

……

……

PRODUCT IDENTIFICATION

Product Description	Varian P/N	Varian S/N	Purchase Reference

TYPE OF RETURN *(check appropriate box)*

☐ Paid Exchange ☐ Paid Repair ☐ Warranty Exchange ☐ Warranty Repair ☐ Loaner Return
☐ Credit ☐ Shipping Error ☐ Evaluation Return ☐ Calibration ☐ Other ……

HEALTH and SAFETY CERTIFICATION

Varian Vacuum Technologies **CAN NOT ACCEPT** any equipment which contains **BIOLOGICAL HAZARDS** or **RADIOACTIVITY**. Call Varian Customer Service to discuss alternatives if this requirement presents a problem.

The equipment listed above (check one):

☐ **HAS NOT** been exposed to any toxic or hazardous materials

OR

☐ **HAS** been exposed to any toxic or hazardous materials. In case of this selection, check boxes for any materials that equipment was exposed to, check all categories that apply:

☐ Toxic ☐ Corrosive ☐ Reactive ☐ Flammable ☐ Explosive ☐ Biological ☐ Radioactive

List all toxic or hazardous materials. Include product name, chemical name and chemical symbol or formula.

……

Print Name: …… Customer Authorized Signature: ……

Print Title: …… Date: ……/……/……

NOTE: If a product is received at Varian which is contaminated with a toxic or hazardous material that was not disclosed, **the customer will be held responsible** for all costs incurred to ensure the safe handling of the product, and **is liable** for any harm or injury to Varian employees as well as to any third party occurring as a result of exposure to toxic or hazardous materials present in the product.

Do not write below this line

Notification (RA)#: …… Customer ID#: …… Equipment #: ……

VARIAN

Request for Return

ISO 9001 REGISTERED

FAILURE REPORT

TURBO PUMPS and TURBOCONTROLLERS

		POSITION	PARAMETERS	
☐ Does not start	☐ Noise	☐ Vertical	Power:	Rotational Speed:
☐ Does not spin freely	☐ Vibrations	☐ Horizontal	Current:	Inlet Pressure:
☐ Does not reach full speed	☐ Leak	☐ Upside-down	Temp 1:	Foreline Pressure:
☐ Mechanical Contact	☐ Overtemperature	☐ Other:	Temp 2:	Purge flow:
☐ Cooling defective		……	OPERATION TIME:	

TURBOCONTROLLER ERROR MESSAGE:

ION PUMPS/CONTROLLERS

☐ Bad feedthrough	☐ Poor vacuum
☐ Vacuum leak	☐ High voltage problem
☐ Error code on display	☐ Other

Customer application:

VALVES/COMPONENTS

☐ Main seal leak	☐ Bellows leak
☐ Solenoid failure	☐ Damaged flange
☐ Damaged sealing area	☐ Other

Customer application:

LEAK DETECTORS

☐ Cannot calibrate	☐ No zero/high backround
☐ Vacuum system unstable	☐ Cannot reach test mode
☐ Failed to start	☐ Other

Customer application:

INSTRUMENTS

☐ Gauge tube not working	☐ Display problem
☐ Communication failure	☐ Degas not working
☐ Error code on display	☐ Other

Customer application:

PRIMARY PUMPS

☐ Pump doesn't start	☐ Noisy pump (describe)
☐ Doesn't reach vacuum	☐ Over temperature
☐ Pump seized	☐ Other

Customer application:

DIFFUSION PUMPS

☐ Heater failure	☐ Electrical problem
☐ Doesn't reach vacuum	☐ Cooling coil damage
☐ Vacuum leak	☐ Other

Customer application:

FAILURE DESCRIPTION

(Please describe in detail the nature of the malfunction to assist us in performing failure analysis):

NOTA: Su richiesta questo documento è disponibile anche in Tedesco, Italiano e Francese.
REMARQUE : Sur demande ce document est également disponible en allemand, italien et français.
HINWEIS: Auf Aufrage ist diese Unterlage auch auf Deutsch, Italienisch und Französisch erhältlich.

Sales and Service Offices

France and Benelux
Varian s.a.
7 Avenue des Tropiques
Z.A. de Courtaboeuf - B.P. 12
Les Ulis cedex (Orsay) 91941
France
Tel: (33) 1 69 86 38 84
Fax: (33) 1 69 86 29 88
From Benelux Tel: (31) 118 67 15 70
From Benelux Fax: (31) 118 67 15 69

Canada
Central coordination through:
Varian Vacuum Technologies
121 Hartwell Avenue
Lexington, MA 02421
USA
Tel: (781) 861 7200
Fax: (781) 860 5437
Toll Free # 1 (800) 882 7426

China
Varian Technologies - Beijing
Rm 1648 Central Tower South Wing
Beijing Junefield Plaza
No. 10 XuanWuMenWai Street
Beijing 100052
P.R. China
Tel: (86) 10 63108550
Fax: (86) 10 63100141
Toll Free: 800 820 6556

Germany and Austria
Varian Deutschland GmbH
Alsfelder Strasse 6
Postfach 11 14 35
64289 Darmstadt
Germany
Tel: (49) 6151 703 353
Fax: (49) 6151 703 302

India
Varian India PVT LTD
101-108, 1st Floor
1010 Competent House
7, Nangal Raya Business Centre
New Delhi 110 046
India
Tel: (91) 11 28521171
Fax: (91) 11 28521173

Italy
Varian Inc.
Vacuum Technologies
Via F.lli Varian 54
10040 Leini, (Torino)
Italy
Tel: (39) 011 997 9 111
Fax: (39) 011 997 9 350

Japan
Varian Vacuum Technologies
Sumitomo Shibaura Building, 8th Floor
4-16-36 Shibaura
Minato-ku, Tokyo 108
Japan
Tel: (81) 3 5232 1253
Fax: (81) 3 5232 1263
Toll Free: 0120 655 040

Korea
Varian Technologies Korea, Ltd
Shinsa 2nd Bldg. 2F
966-5 Daechi-dong
Kangnam-gu, Seoul
Korea 135-280
Tel: (82) 2 3452 2452
Fax: (82) 2 3452 2451
Toll Free: 080 222 2452

Mexico
Varian, S. de R.L. de C.V.
Concepcion Beistegui No 109
Col Del Valle
C.P. 03100
Mexico, D.F.
Tel: (52) 5 523 9465
Fax: (52) 5 523 9472

Taiwan
Varian Technologies Asia Ltd.
14F-6, No.77, Hsin Tai Wu Rd., Sec. 1
Hsi chih, Taipei Hsien
Taiwan, R.O.C.
Tel: (886) 2 2698 9555
Fax: (886) 2 2698 9678
Toll Free: 0800 051342

UK and Ireland
Varian Ltd.
6 Mead Road
Oxford Industrial Park - Yarnton
Oxford OX5 1QU - England
Tel: (44) 1865 291570
Fax: (44) 1865 291571

United States
Varian Vacuum Technologies
121 Hartwell Avenue
Lexington, MA 02421
USA
Tel: (781) 861 7200
Fax: (781) 860 5437

Other Countries
Varian Inc.
Vacuum Technologies
Via F.lli Varian 54
10040 Leini, (Torino)
Italy
Tel: (39) 011 997 9 111
Fax: (39) 011 997 9 350

Customer Support & Service:

North America
Toll-Free: 1 800 882 7426
vtl.technical.support@varianinc.com

Europe
Tel: 00 800 234 234 00
vtt.technical.support@varianinc.com

China
Toll-Free: 800 820 8266
vtc.technical.support@varianinc.com

Japan
Toll-Free: 0120 655 040
vtj.technical.support@varianinc.com

Korea
Toll-Free: 080 222 2452
vtk.technical.support@varianinc.com

Taiwan
Toll-Free: 0 800 051 342
vtw.technical.support@varianinc.com

Worldwide Web Site, Catalog and Order On-line:
www.varianinc.com

Representative in most countries

VARIAN

03/06